ATMO sphere ASIA
solutions for asia
natural refrigerants

9 & 10 February, 2016 – Tokyo

Energy saving effect of ejector technology

Climate, cooling & heating Engineering Division 2
Masahiro Takatsu

DENSO

地球と生命を守り、次世代に明るい未来を届けたい

Protecting lives, Preserving the planet, and Preparing a bright future for generations to come

Outline of Ejector technology

© DENSO CORPORATION All rights reserved.
This information is the exclusive property of DENSO CORPORATION. Without their consent, it may not be reproduced or given to third parties.

DENSO's products with refrigerant cycle

DENSO

Car air conditioner

EcoCute

Refrigerator track

Cool box

Issue of traditional refrigerant cycle

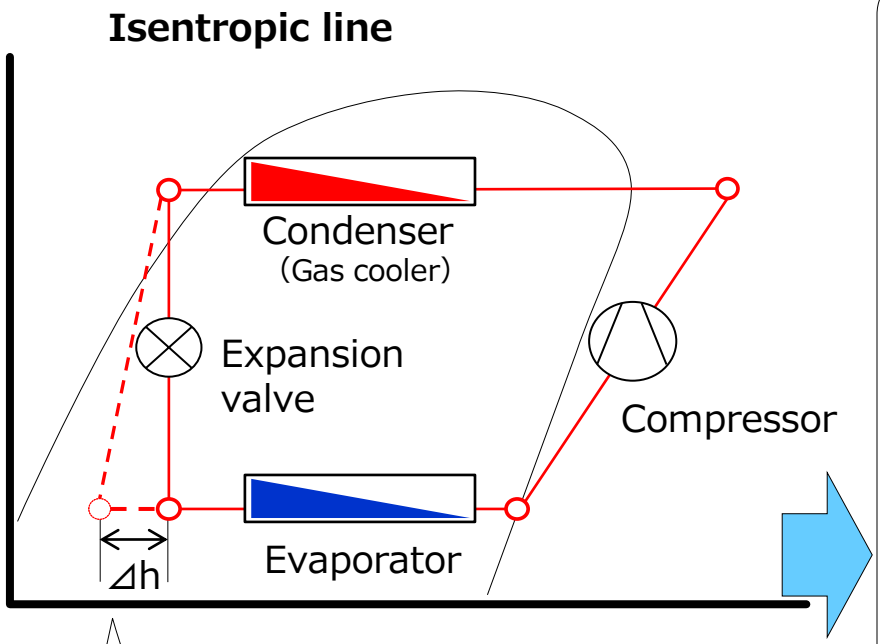

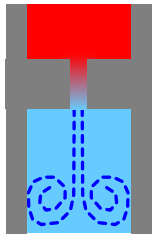

Loosing energy during expansion as vortex

DENSO's original tech.

For Car air conditioner (in evaporator)

For CO2 refrigerant
EcoCute
Vending machine

For refrigerator track (R404A)

For cool box

Adapting DENSO's original ejector technology to various product

© DENSO CORPORATION All rights reserved.
This information is the exclusive property of DENSO CORPORATION. Without their consent, it may not be reproduced or given to third parties.

Ejector cycle

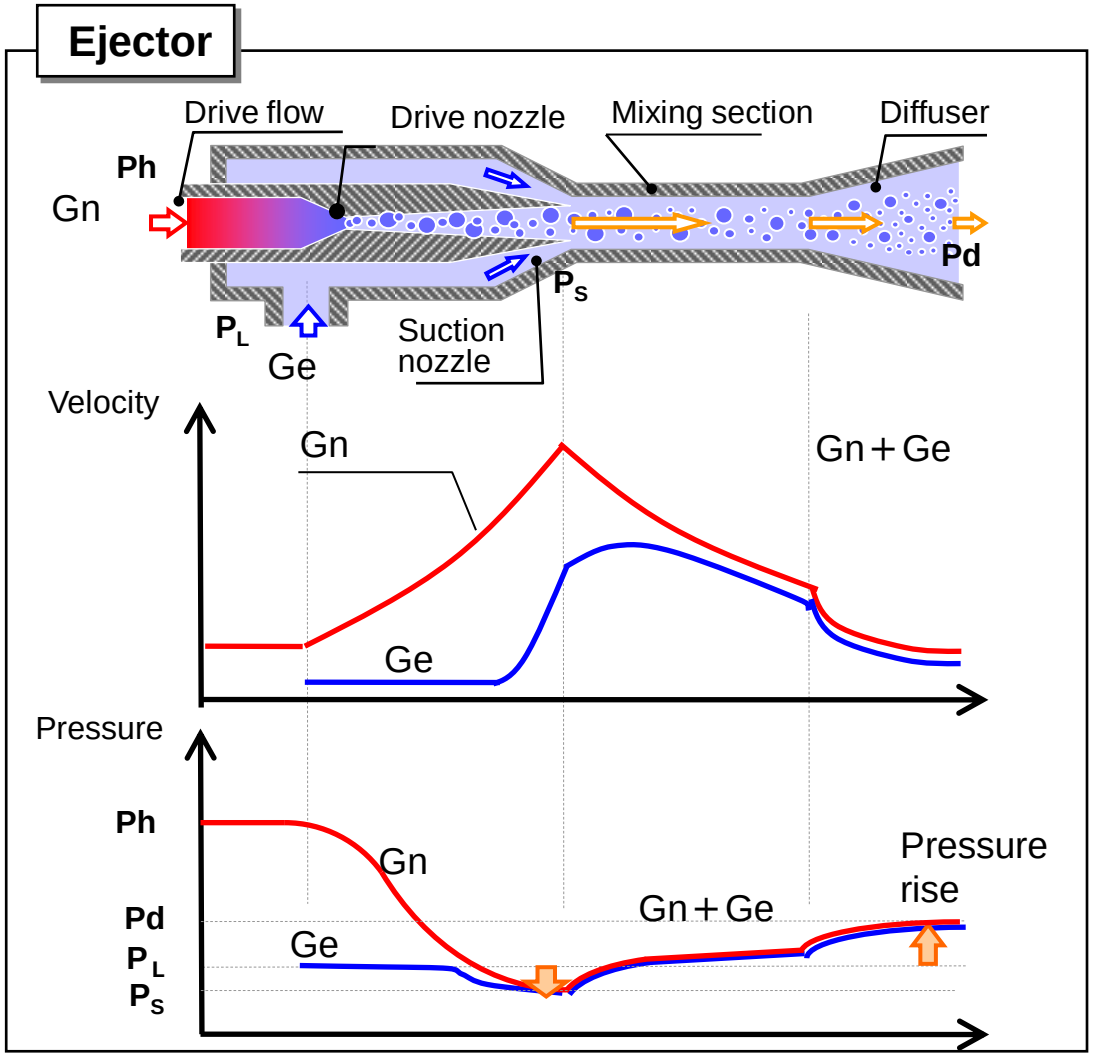

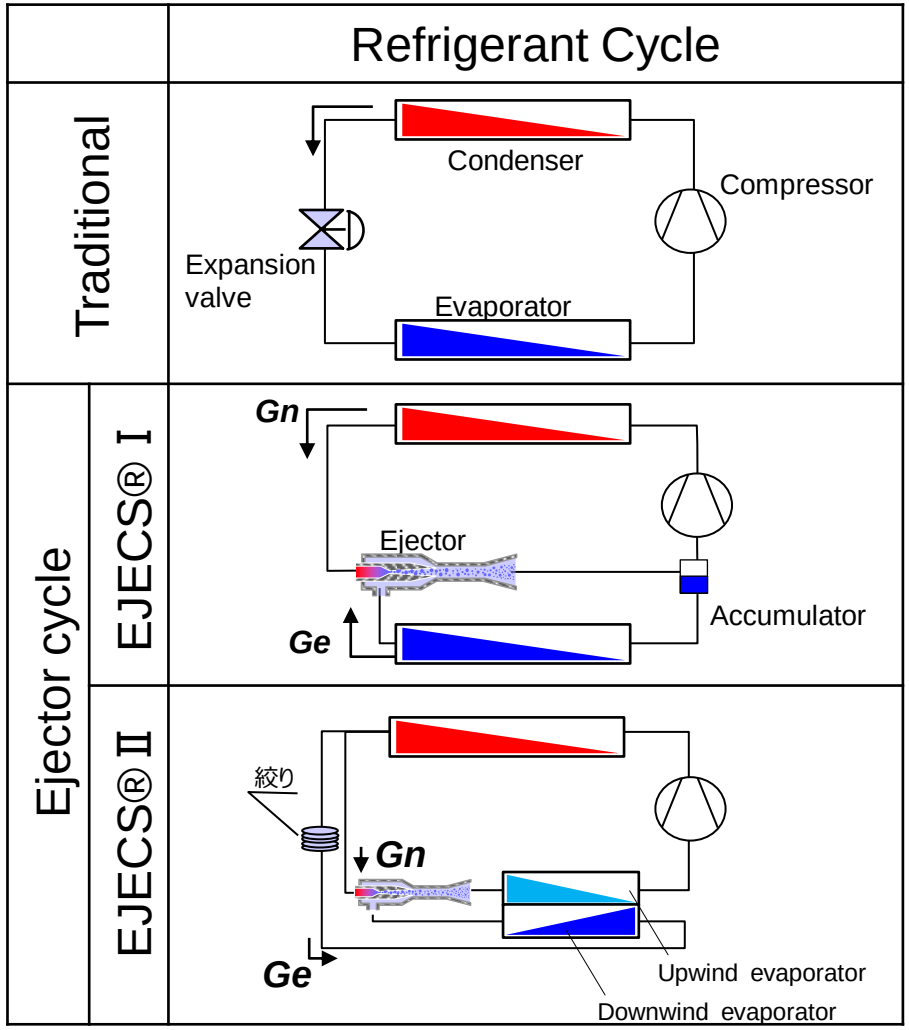

Ejector： Fluid pump which suck and rise refrigerant flow by unused energy

© DENSO CORPORATION All rights reserved.
This information is the exclusive property of DENSO CORPORATION. Without their consent, it may not be reproduced or given to third parties.

DENSO's ejector products development

	’03	’04	’05	’06	’07	’08	’09	’10	’11	’12	’13	’14	’15
Refrigerator truck (R404A)	● World first Ejector					● EJECS® Ⅱ 2 temperature evaporator							
Stationary products (CO2)	● World first CO_2 Ejector (EcoCute)					● EJECS® Ⅱ 2 temperature evaporator (EcoCute)							● Vending machine Collaborated with Fuji electric
Car air conditioner (R134a)					● Cool box 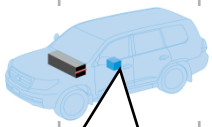		● EJECS® Ⅱ (Car air conditioner)				● EJECS® Ⅱ (STEP2)		

Ejector are Integrated in evaporator. } Space saving

World first mass production type ejector was released in 2003

© DENSO CORPORATION All rights reserved.
This information is the exclusive property of DENSO CORPORATION. Without their consent, it may not be reproduced or given to third parties.

CO_2 heat pump water heater -EcoCute-

© DENSO CORPORATION All rights reserved.
This information is the exclusive property of DENSO CORPORATION. Without their consent, it may not be reproduced or given to third parties.

CO_2 refrigerant cycle & Ejector for EcoCute

- **EJECS®I (since 2003)**

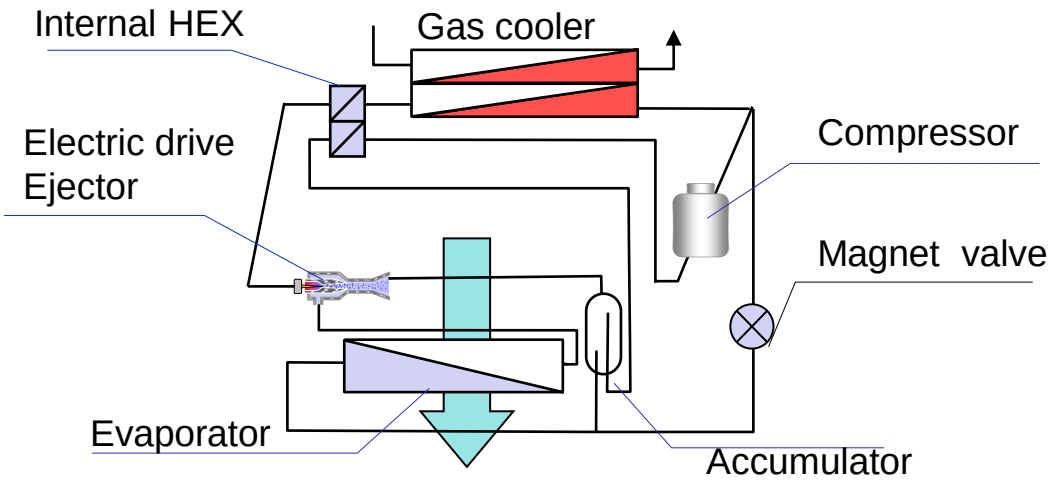

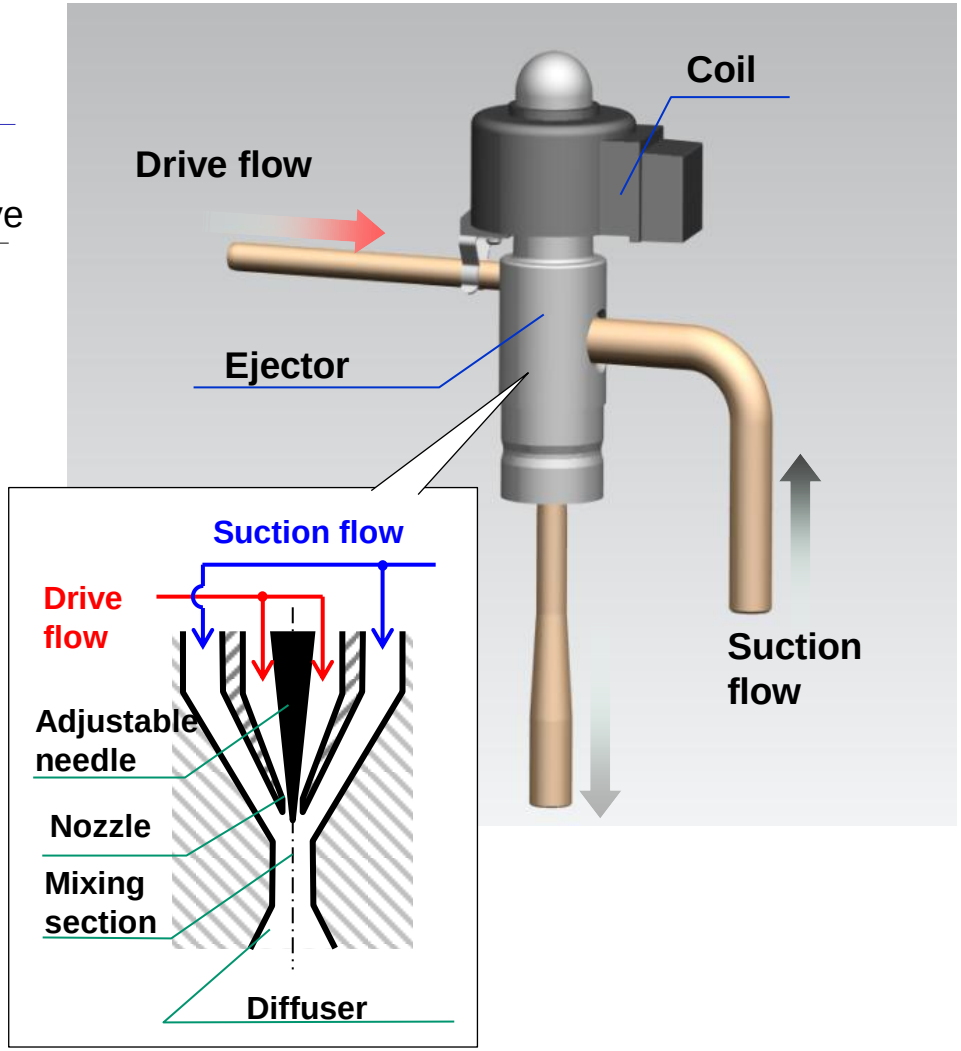

- **EJECS®II (since 2008)**

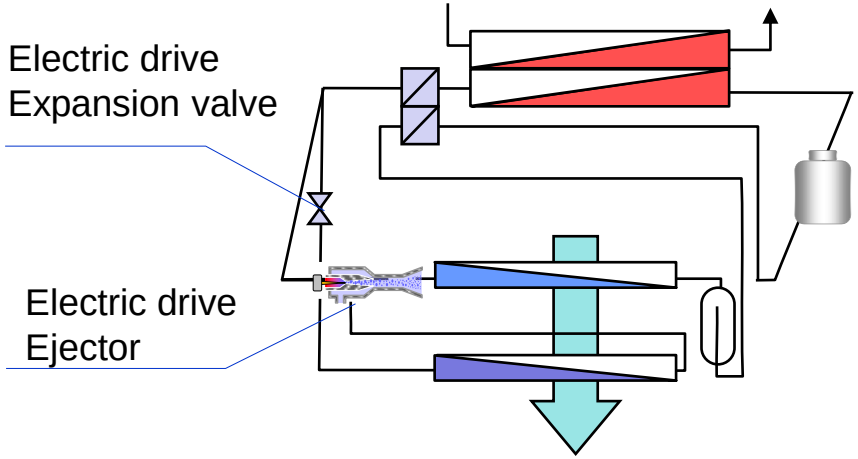

© DENSO CORPORATION All rights reserved.
This information is the exclusive property of DENSO CORPORATION. Without their consent, it may not be reproduced or given to third parties.

Purpose of adapting EJECS® Ⅱ cycle

	EJECS®Ⅰ	EJECS® Ⅱ
Refrigerant cycle	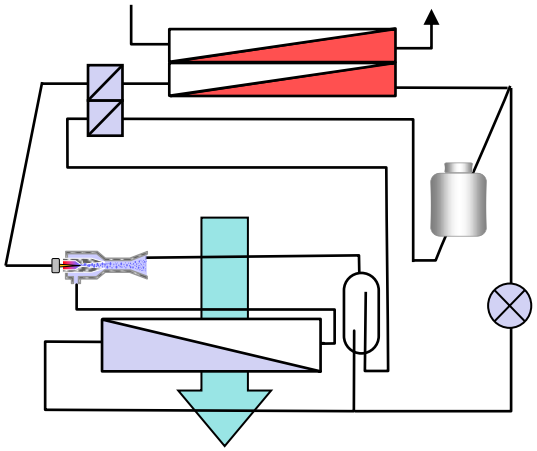	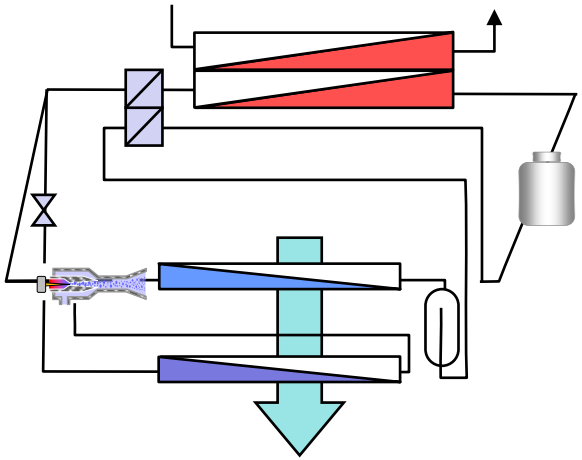
Frost on evaporator	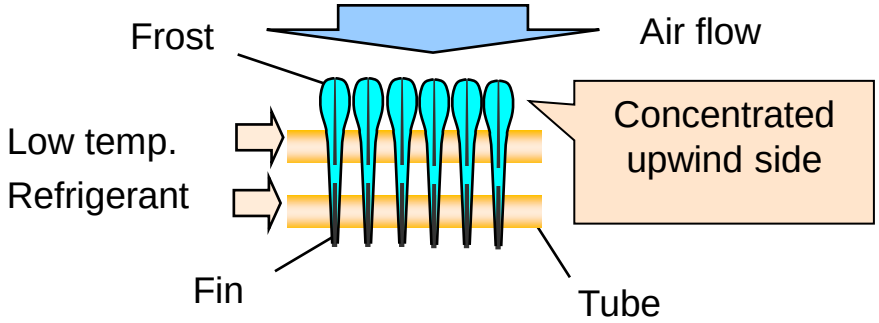	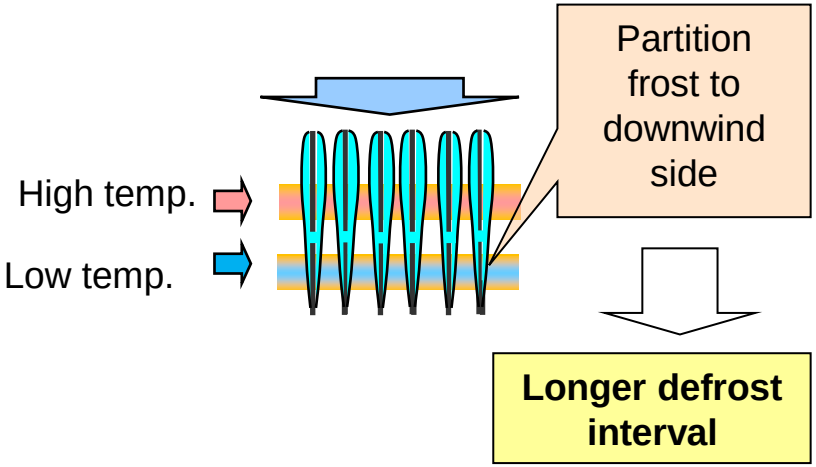

© DENSO CORPORATION All rights reserved.
This information is the exclusive property of DENSO CORPORATION. Without their consent, it may not be reproduced or given to third parties.

Experimental result under frost condition

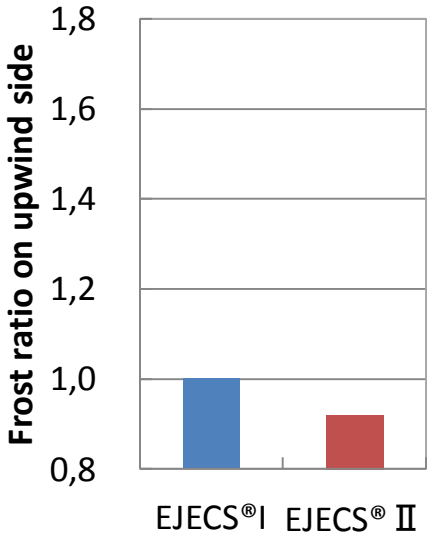

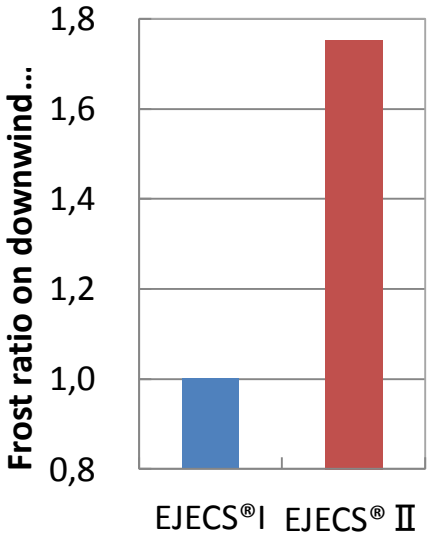

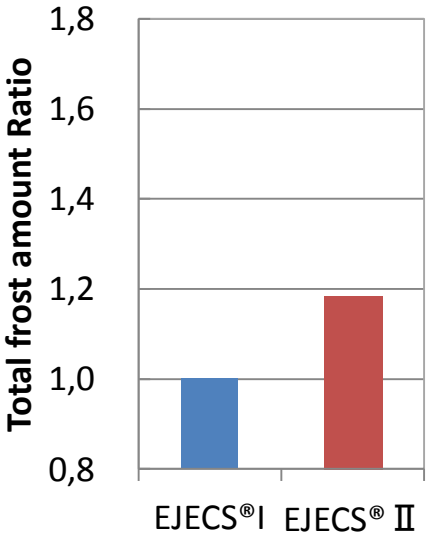

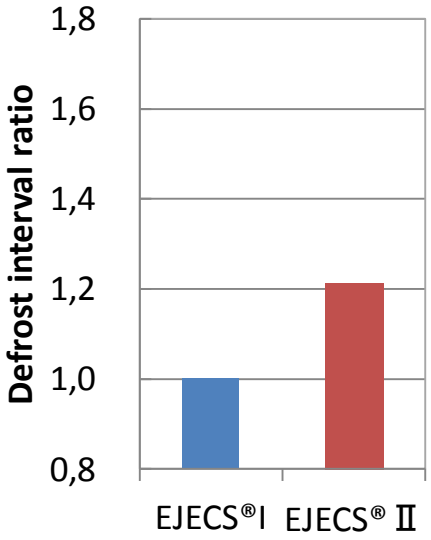

Experimental condition：
JIS C9220 A2 high hot water condition

Larger frost amount on downwind side & longer defrost interval was confirmed

© DENSO CORPORATION All rights reserved.
This information is the exclusive property of DENSO CORPORATION. Without their consent, it may not be reproduced or given to third parties.

Performance improvement

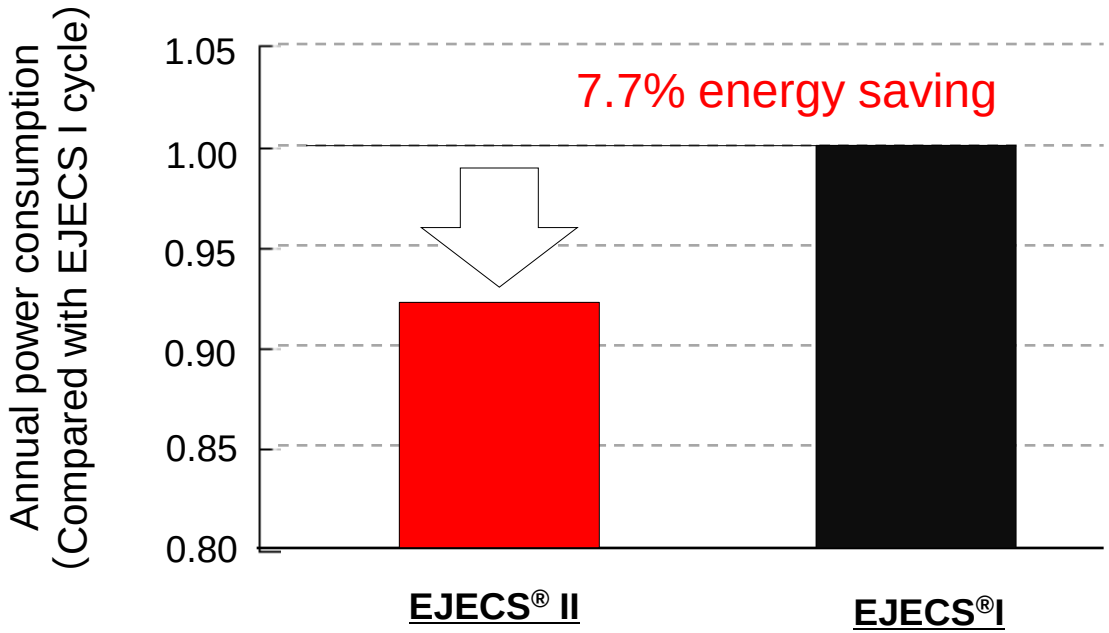

Measuring condition：
JIS C9220

Thanks to better COP in A2 condition, APF was improved by 7.7%

© DENSO CORPORATION All rights reserved.
This information is the exclusive property of DENSO CORPORATION. Without their consent, it may not be reproduced or given to third parties.

CO_2 refrigerant vending machine

© DENSO CORPORATION All rights reserved.
This information is the exclusive property of DENSO CORPORATION. Without their consent, it may not be reproduced or given to third parties.

CO_2 refrigerant cycle for vending machine

Joint development with Fuji electric

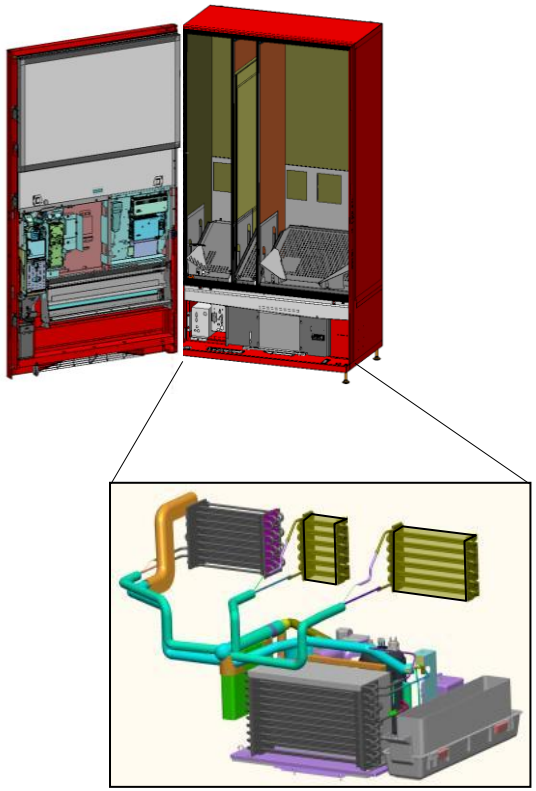

- **Conventional system**

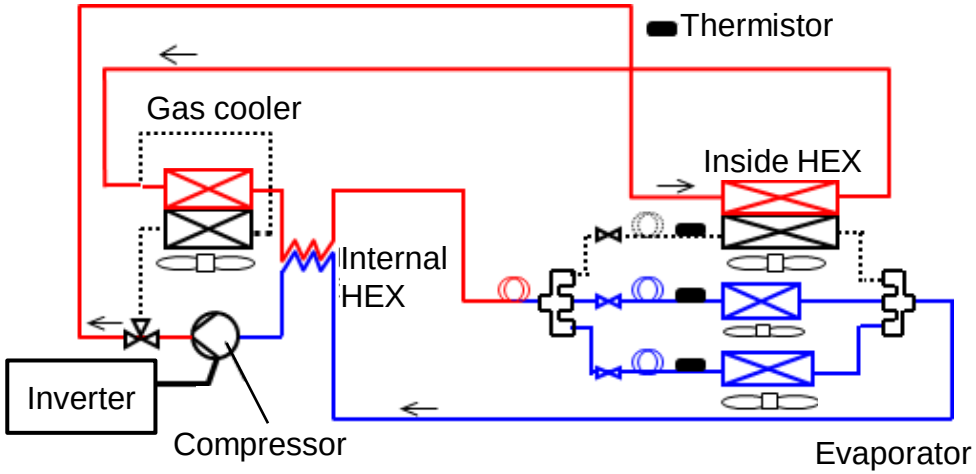

- **Developed system**

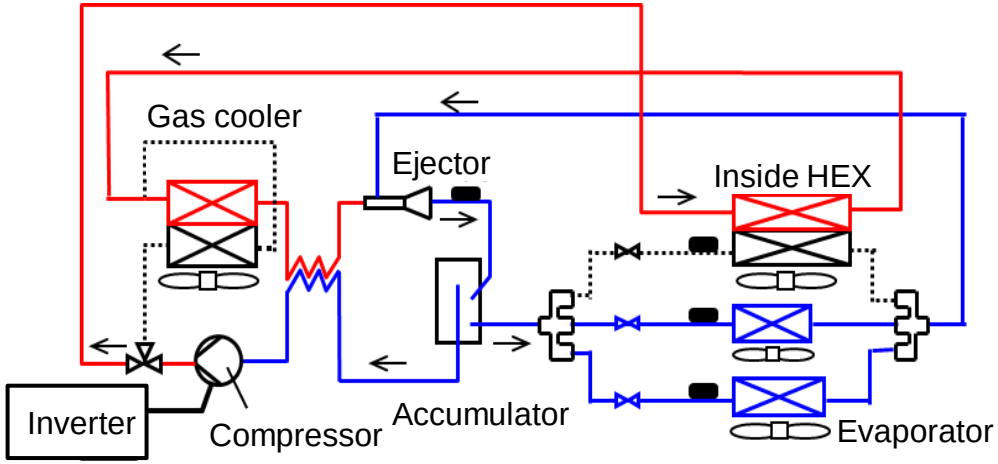

© DENSO CORPORATION All rights reserved.
This information is the exclusive property of DENSO CORPORATION. Without their consent, it may not be reproduced or given to third parties.

New control scheme

Conventional

■EcoCute

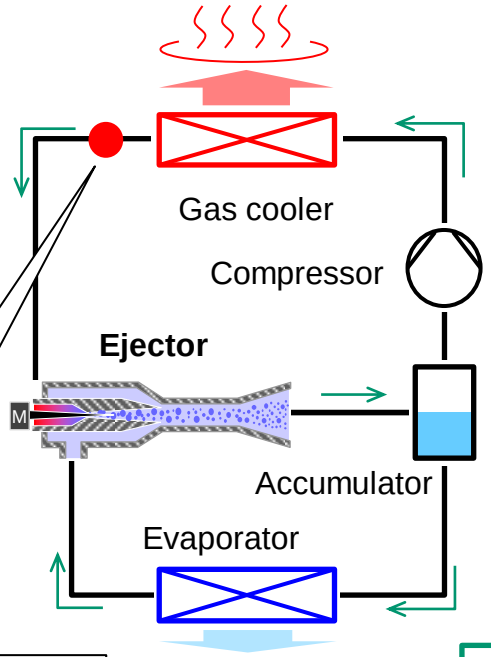

Control high pressure for heating

Developed

■Vending machine

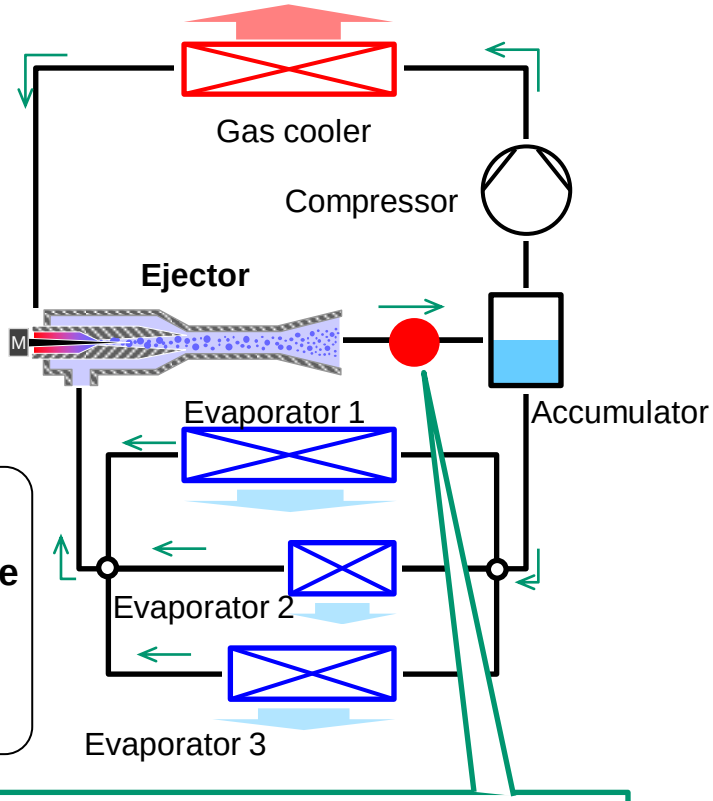

Issue

Each evaporator outlet temperature are different

Poor response

Control low pressure by monitoring ejector outlet temp.

Stable refrigerant cycle control and COP improved was achieved

© DENSO CORPORATION All rights reserved.
This information is the exclusive property of DENSO CORPORATION. Without their consent, it may not be reproduced or given to third parties.

Energy saving effect

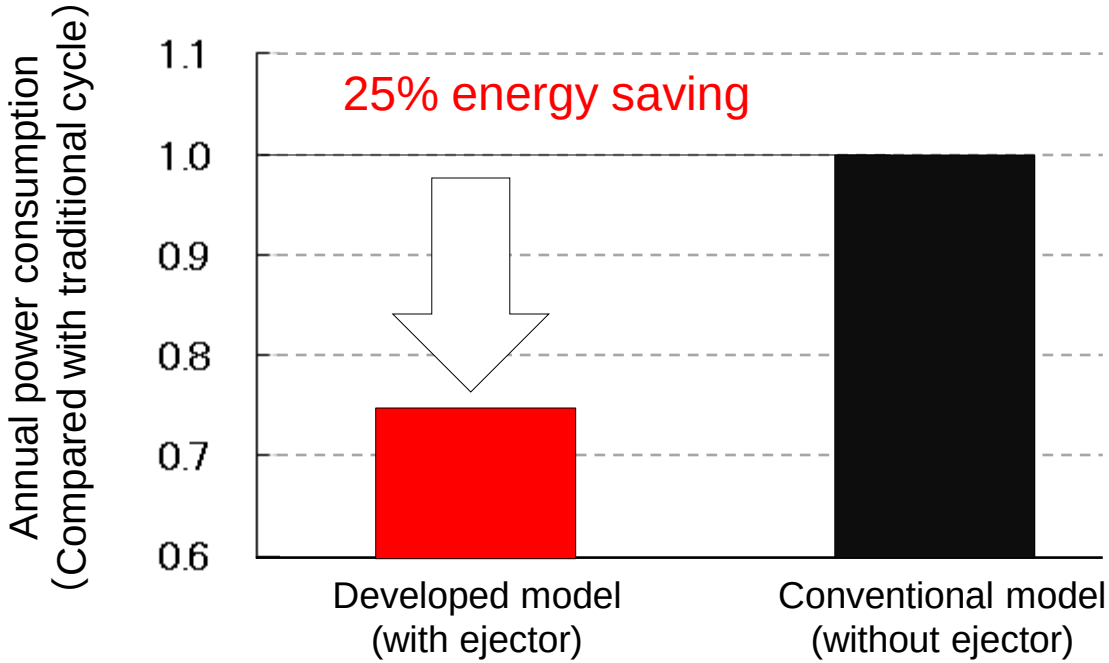

Measuring condition:
JIS B 8561 : 2007

25% energy saving was achieved by ejector
→Top class energy saving including HFO machine !

© DENSO CORPORATION All rights reserved.
This information is the exclusive property of DENSO CORPORATION. Without their consent, it may not be reproduced or given to third parties.

Expanding ejector technology to other field

Ejector technology
－New generation refrigerant cycle－

Cool BOX

2007～

Refrigerator truck

2003～

EcoCute

2003 ～

Car air conditioner

2009～ STEP1
2013～ STEP2

Vending machine

2015 ～

Commercial refrigerator

Stationary A/C

Vehicle

Stationary

Contribute energy saving by expanding ejector to other refrigerant cycle.

© DENSO CORPORATION All rights reserved.
This information is the exclusive property of DENSO CORPORATION. Without their consent, it may not be reproduced or given to third parties.

Thank you for your attention!

© DENSO CORPORATION All rights reserved.
This information is the exclusive property of DENSO CORPORATION. Without their consent, it may not be reproduced or given to third parties.