EUROPE
ATMO
sphere
solutions for europe
natural refrigerants
19 & 20 April, 2016 – Barcelona

ATMOsphere EUROPE
solutions for europe
natural refrigerants
19 & 20 April, 2016 – Barcelona

Energy saving effect of ejector technology

Applications in heating and cooling

DENSO Europe

Masataka Imazu

Pim Vernooij

Jennifer Yun

Contact:
m.imazu@denso.nl
p.vernooij@denso.nl
j.yun@denso.nl

Protecting lives, Preserving the planet, and Preparing a bright future for generations to come

DENSO

Corporate profile

Safety · Comfort & Convenience · Environment · Non Automotive

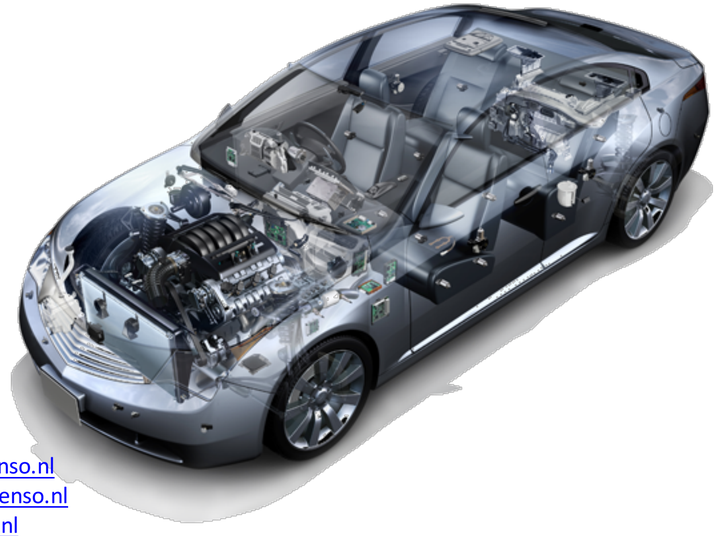

Established	December 16, 1949
Capital	€ 1.4 billion
Net sales	
Consolidated basis	€ 31.4 billion
Non-consolidated basis	€ 17.8 billion
Net income	
Consolidated basis	€ 2.6 billion
Non-consolidated basis	€ 1.2 billion
Employees	
Consolidated basis	146.714
Non-consolidated basis	38.493
Consolidated subsidiaries (Japan 61, North America 28, Europe 35, Asia/Oceania 58, Others 6)	188
Affiliates under the equity method (Japan 13, North America 4, Europe 4, Asia/Oceania 12, South America/Others 2)	32

as of March 31, 2015

Notes:
EUR€ amounts have been translated, for convenience only, at the rate of 123.63 yen = EUR€ 1, the approximate exchange rate prevailing on April 12, 2016.
Billion is used in the American sense of one thousand million.

Contact:
m.imazu@denso.nl
p.vernooij@denso.nl
j.yun@denso.nl

ATMO sphere EUROPE solutions for europe natural refrigerants

Outline of Ejector technology

Contact:
m.imazu@denso.nl
p.vernooij@denso.nl
j.yun@denso.nl

DENSO products with refrigerant cycle

DENSO

Car air conditioner

EcoCute

Refrigerator truck

Cool box

Issue of traditional refrigerant cycle

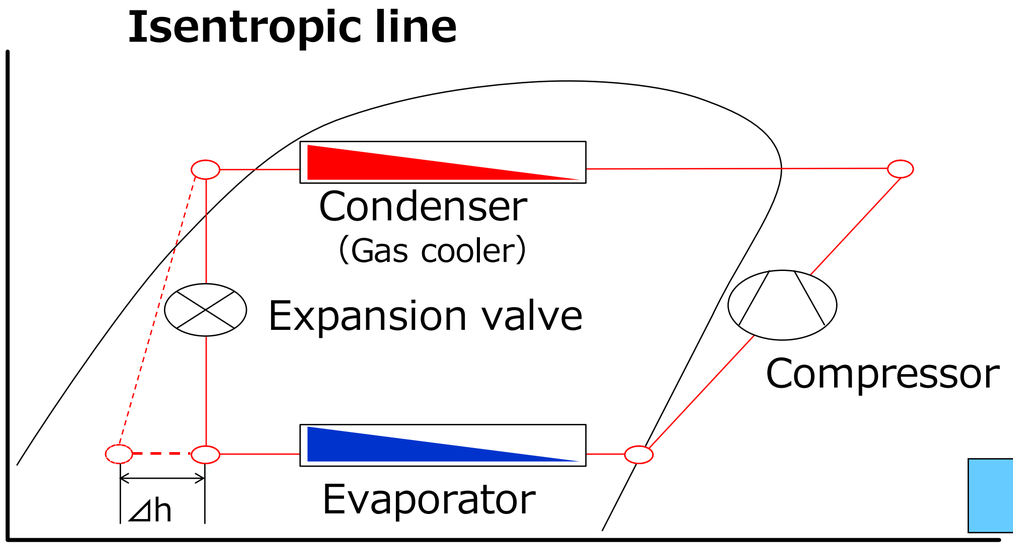

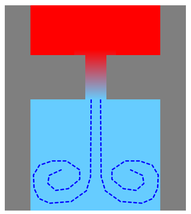

Loosing energy during expansion as vortex

DENSO's original tech.

For Car air conditioner (in evaporator)

For CO_2 refrigerant
EcoCute
Vending machine

For refrigerator truck (R404A)

For cool box

Adapting DENSO's original ejector technology to various products

m.imazu@denso.nl
p.vernooij@denso.nl
j.yun@denso.nl

Protecting lives, Preserving the planet, and Preparing a bright future for generations to come DENSO

ATMO sphere EUROPE solutions for europe natural refrigerants

Ejector cycle

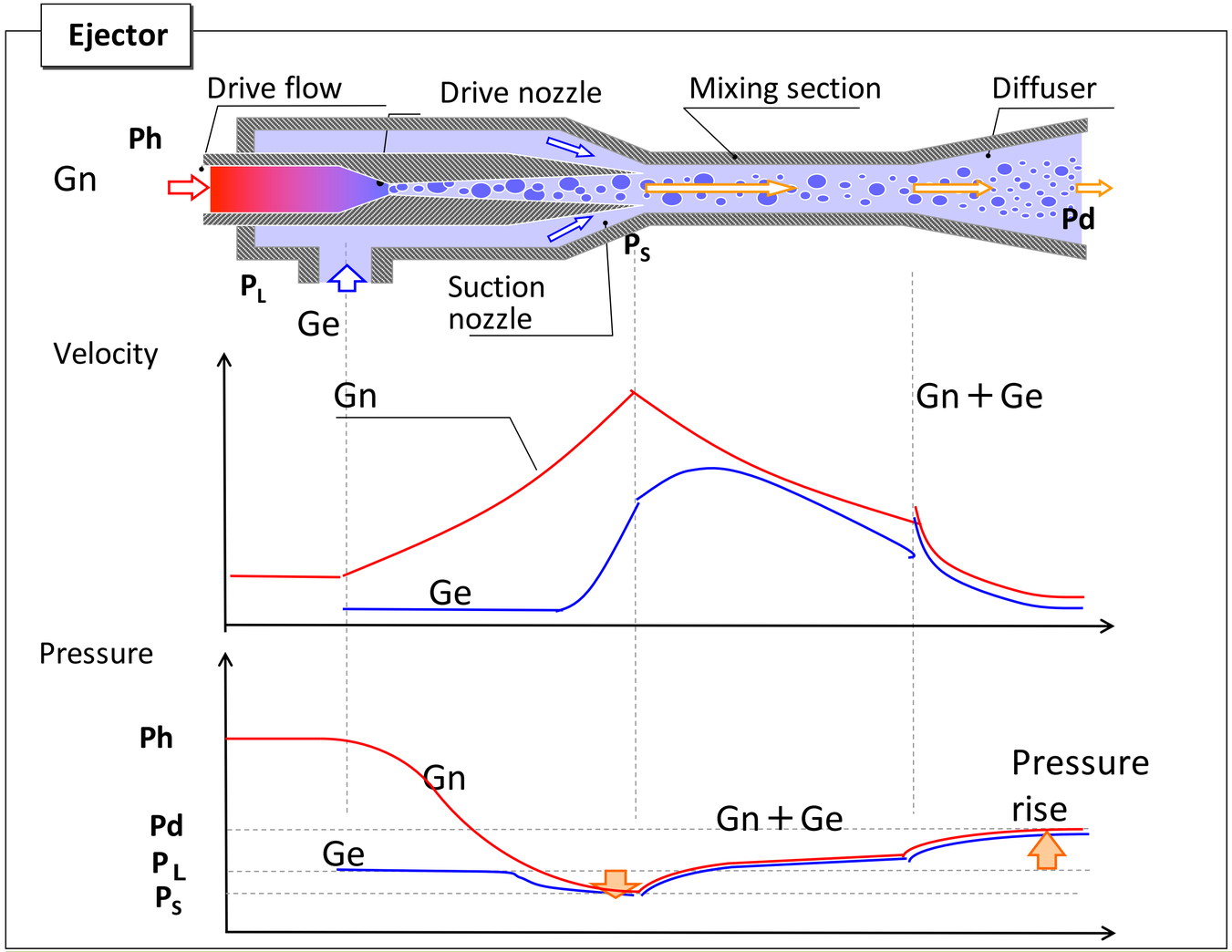

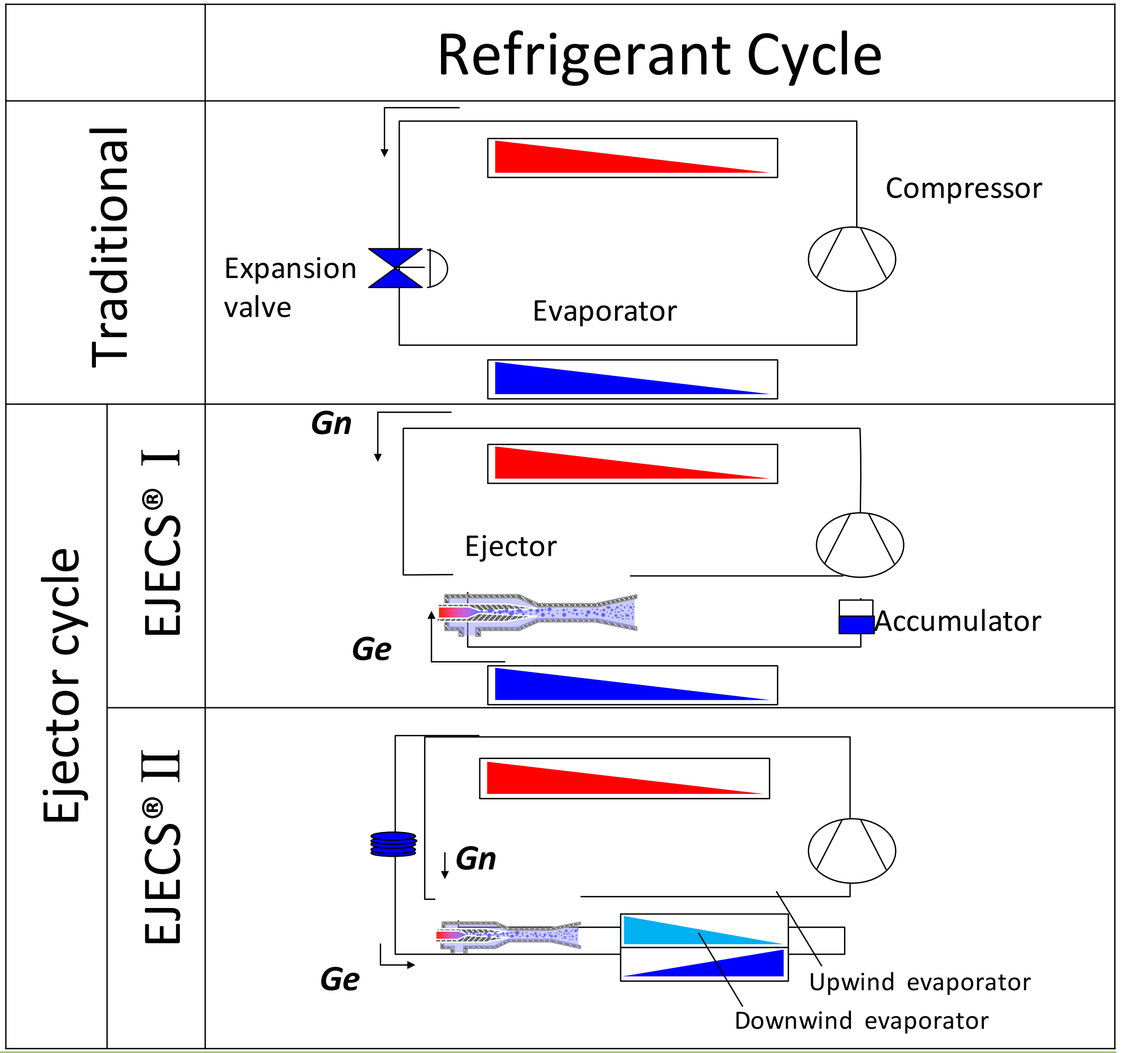

Ejector： Fluid pump which suck and rise refrigerant flow by unused energy

m.mazu@denso.nl
p.vernooij@denso.nl
j.yun@denso.nl

ATMO sphere EUROPE solutions for europe natural refrigerants

DENSO ejector product development

	‘03	’04	’05	’06	’07	’08	’09	’10	’11	’12	’13	’14	’15	→
Refrigerated truck (R404A)	● World first Ejector					● EJECS® Ⅱ 2 temperature evaporator								
Stationary products (CO_2)	● World first CO_2 Ejector (EcoCute)					● EJECS® Ⅱ 2 temperature evaporator (EcoCute)	● CO_2 heat pump with ejector cycle (Stiebel Eltron WPL5N)						● Vending machine Collaboration with Fuji Electric	Display cabinet Stationary AC
Car air conditioner (R134a)	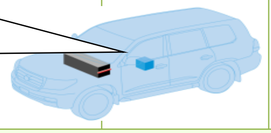				● Cool box	● EJECS® Ⅱ (Car air conditioner)					● EJECS® Ⅱ (STEP2)			

World first mass production type ejector was released in 2003

m.imazu@denso.nl
p.vernooij@denso.nl
j.yun@denso.nl

ATMO sphere EUROPE solutions for europe natural refrigerants

CO_2 heat pump water heater -EcoCute-

Contact:
m.imazu@denso.nl
p.vernooij@denso.nl
j.yun@denso.nl

ATMO sphere EUROPE solutions for europe natural refrigerants

CO_2 refrigerant cycle & Ejector for EcoCute

- **EJECS®I (since 2003)**

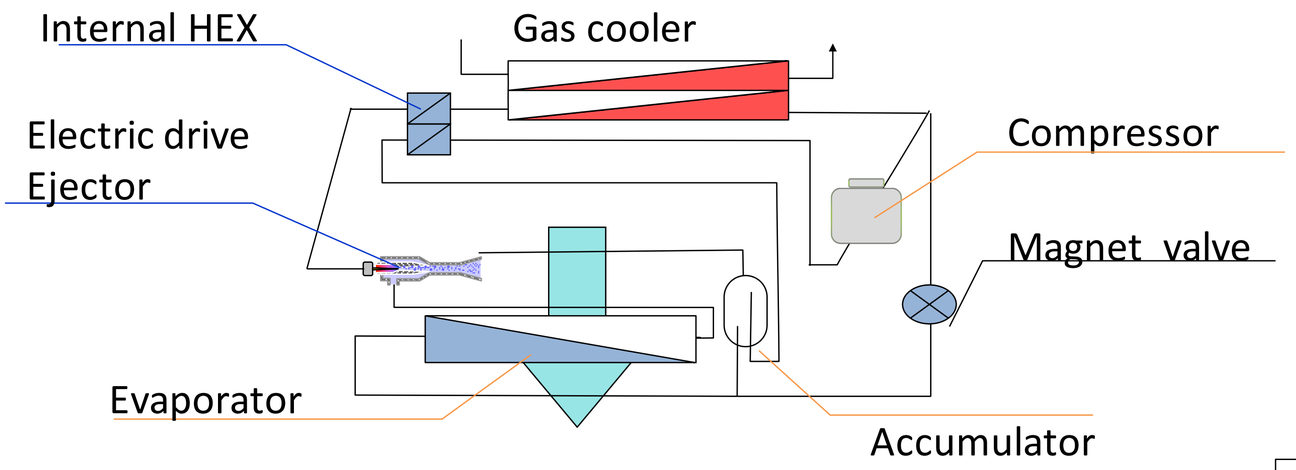

- **EJECS®II (since 2008)**

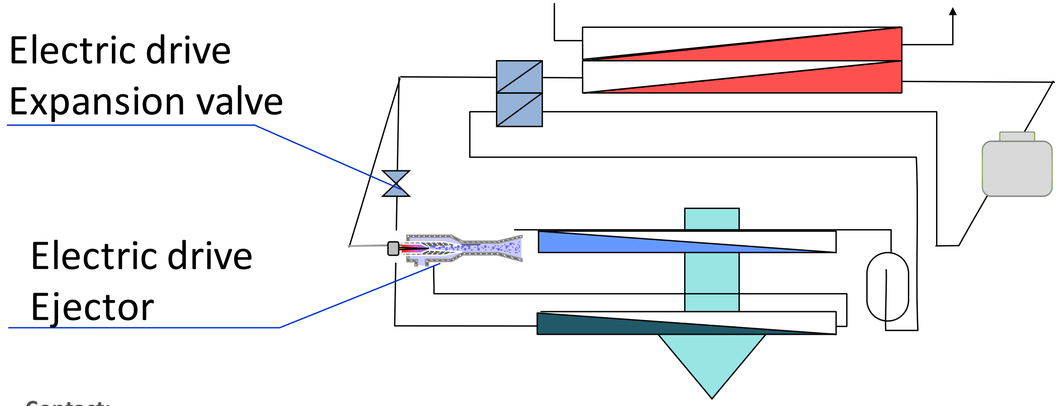

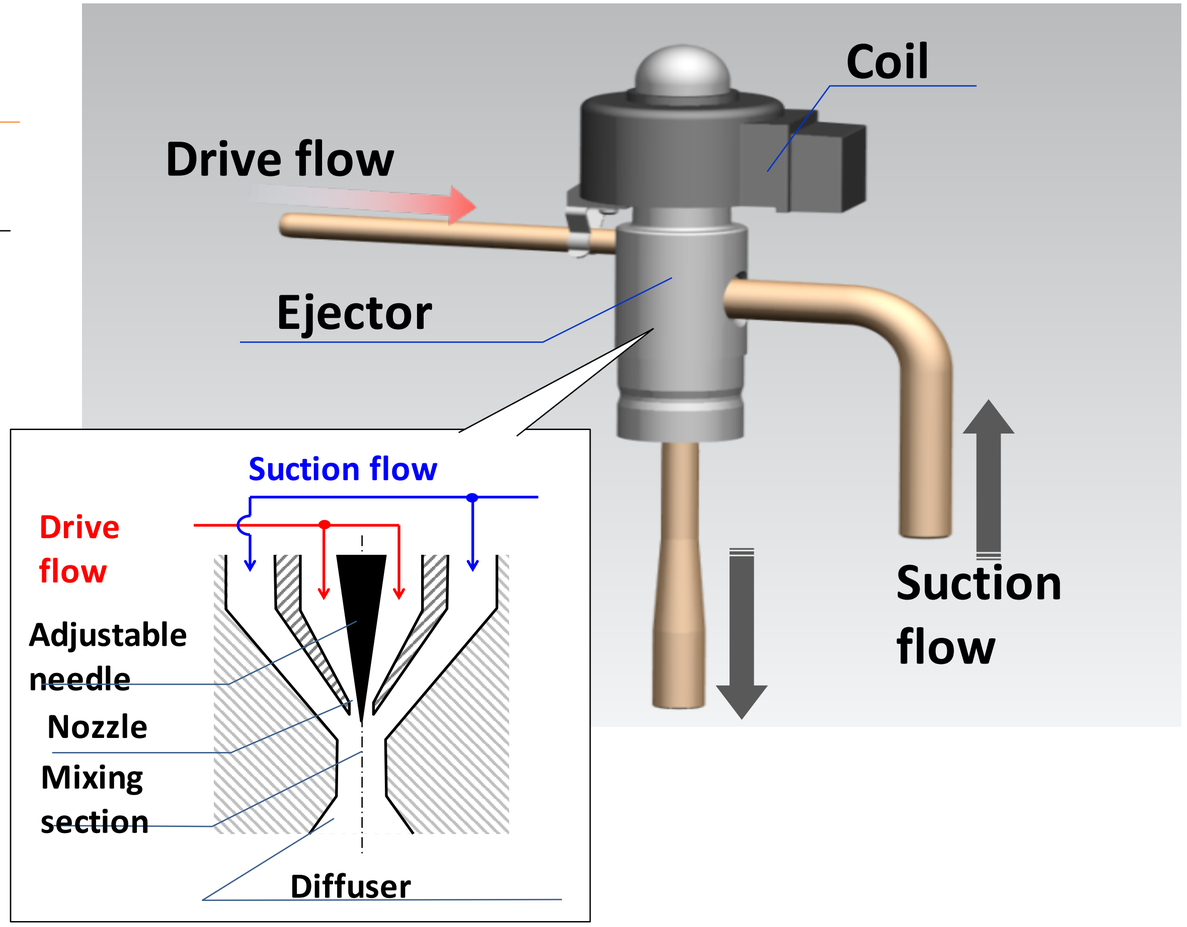

Contact:
m.imazu@denso.nl
p.vernooij@denso.nl
j.yun@denso.nl

Purpose of adapting EJECS® Ⅱ cycle

	EJECS®Ⅰ	EJECS® Ⅱ
Refrigerant cycle	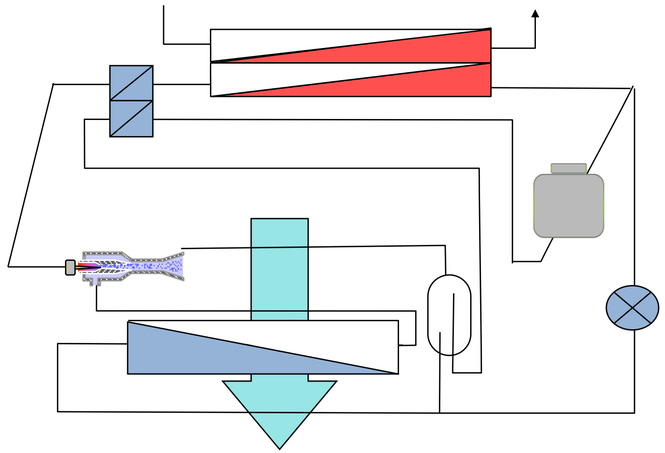	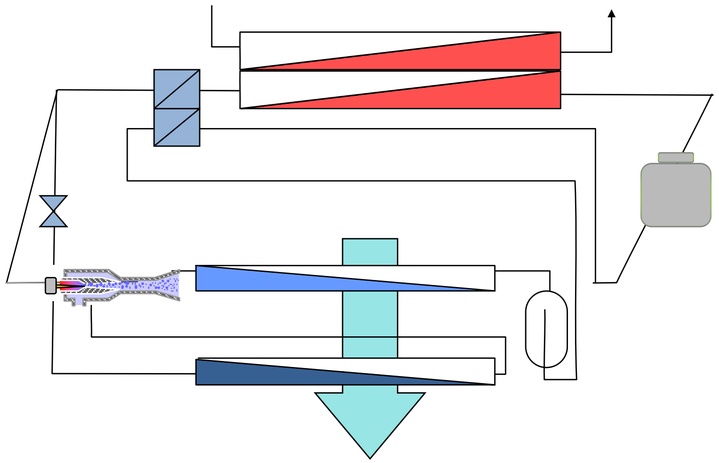
Frost on evaporator	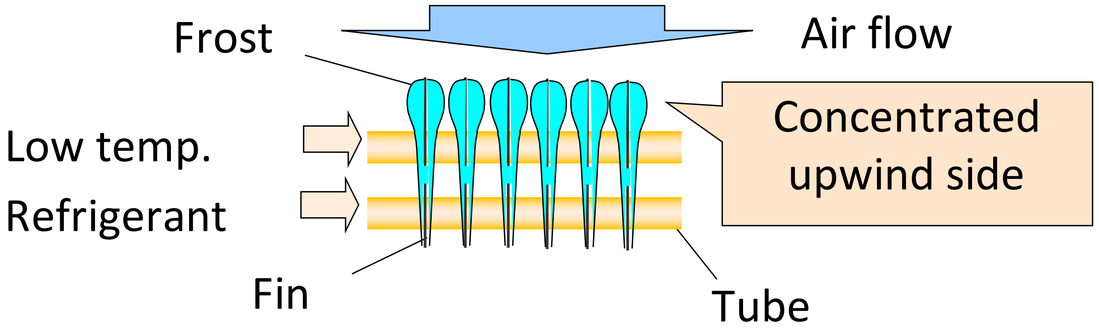	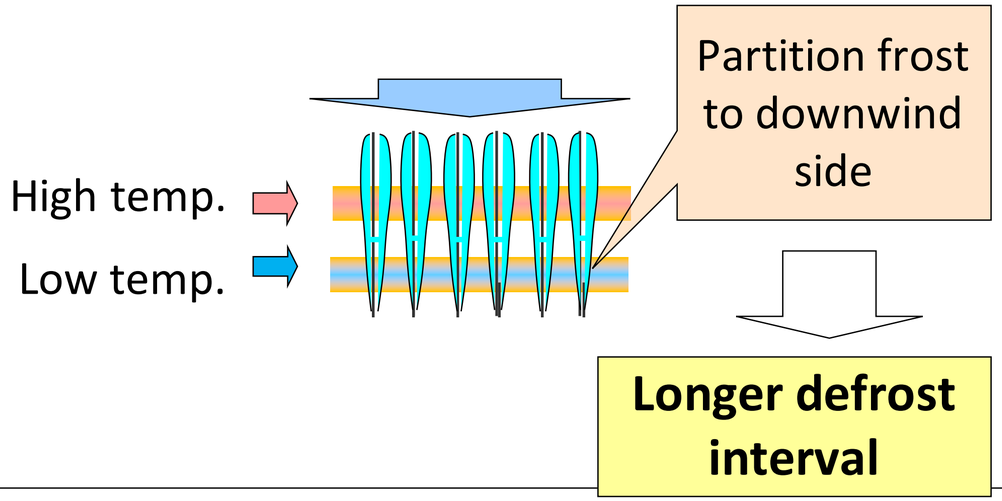

Cont
m.im
p.vernooij@denso.nl
j.yun@denso.nl

ATMO sphere EUROPE solutions for europe natural refrigerants

CO_2 refrigerant vending machine

Contact:
m.imazu@denso.nl
p.vernooij@denso.nl
j.yun@denso.nl

ATMO sphere EUROPE solutions for europe natural refrigerants

CO_2 refrigerant cycle for vending machine

In Japan, hot+cold vending machines are common.

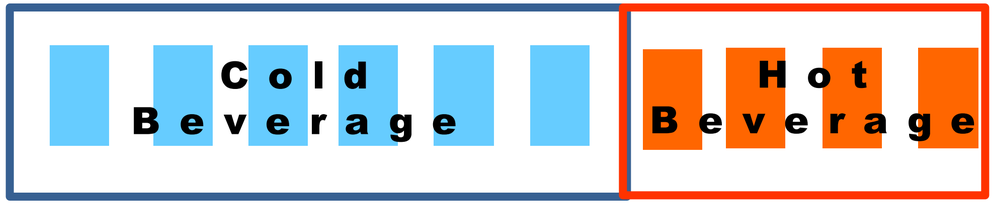

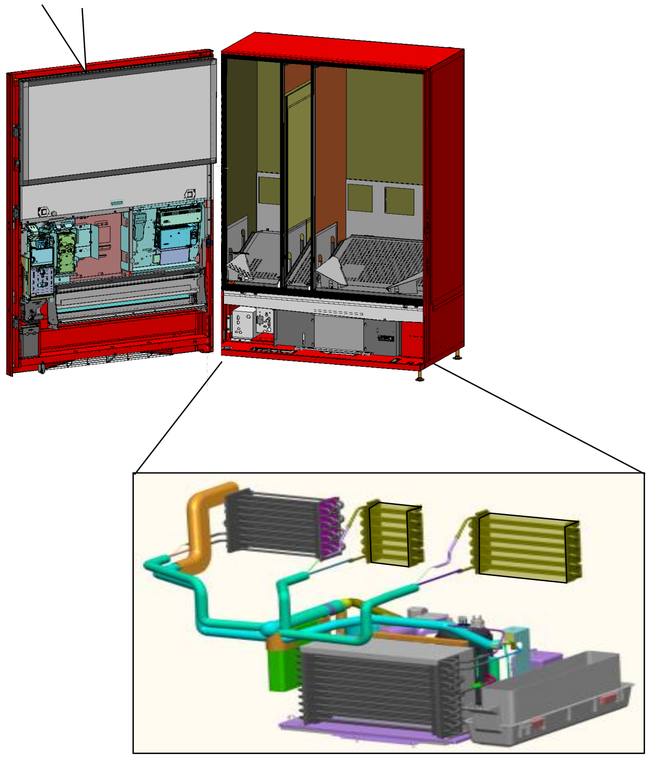

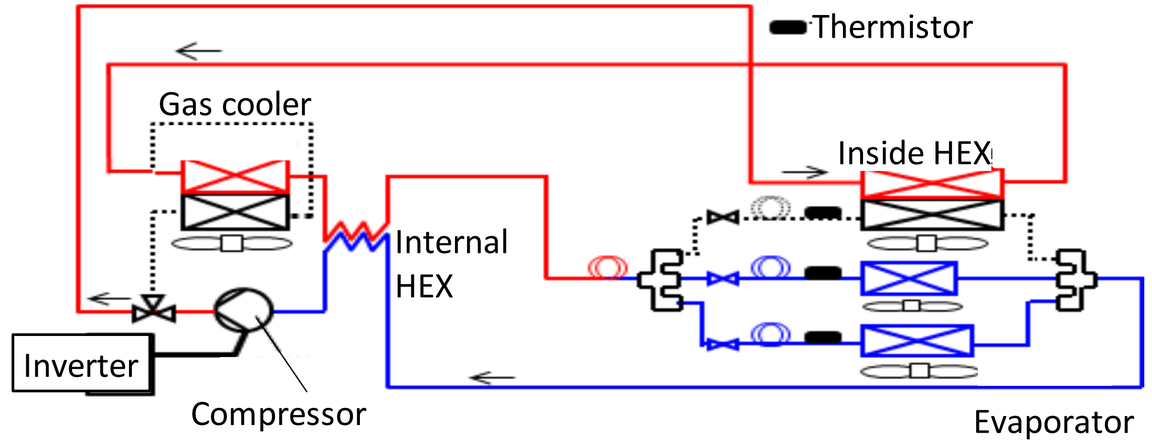

- **Developed system** *Joint development with Fuji Electric*

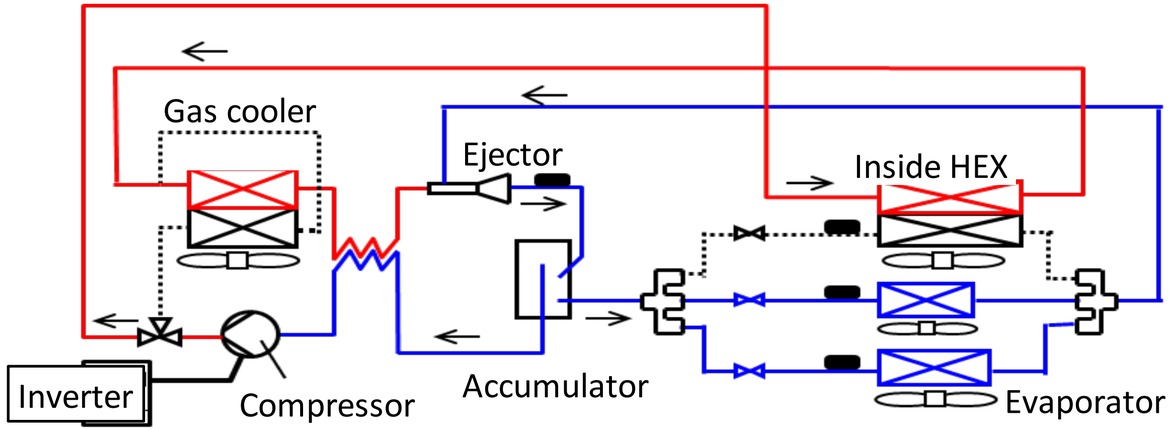

Contact:
m.imazu@denso.nl
p.vernooij@denso.nl
j.yun@denso.nl

ATMO sphere EUROPE solutions for europe natural refrigerants

New control scheme

Conventional

■ **EcoCute**

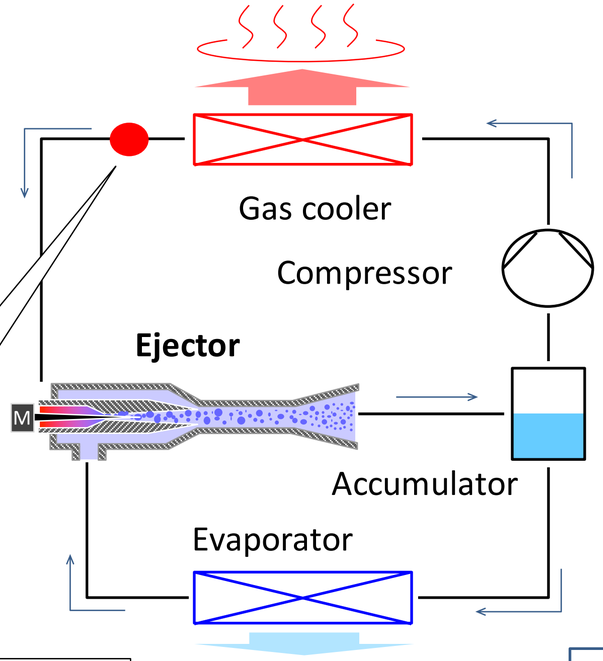

Control high pressure for heating

Developed

■ **Vending machine**

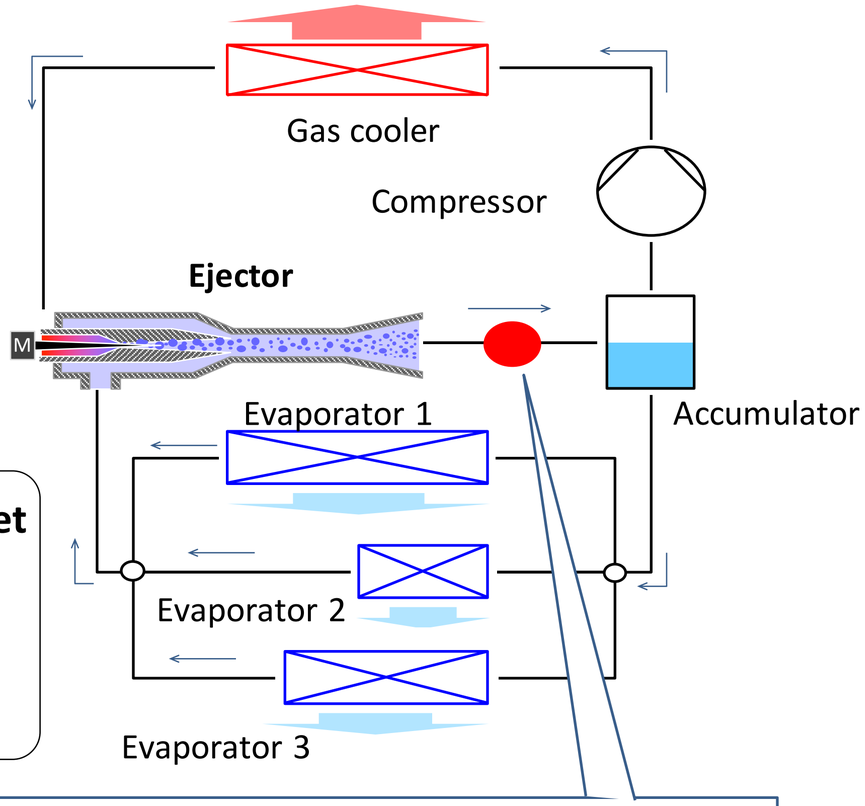

Issue

Each evaporator outlet temperature are different

Poor response

Control low pressure by monitoring ejector outlet temp.

Stable refrigerant cycle control and COP improved was achieved

p.vernooij@denso.nl
j.yun@denso.nl

Energy saving effect

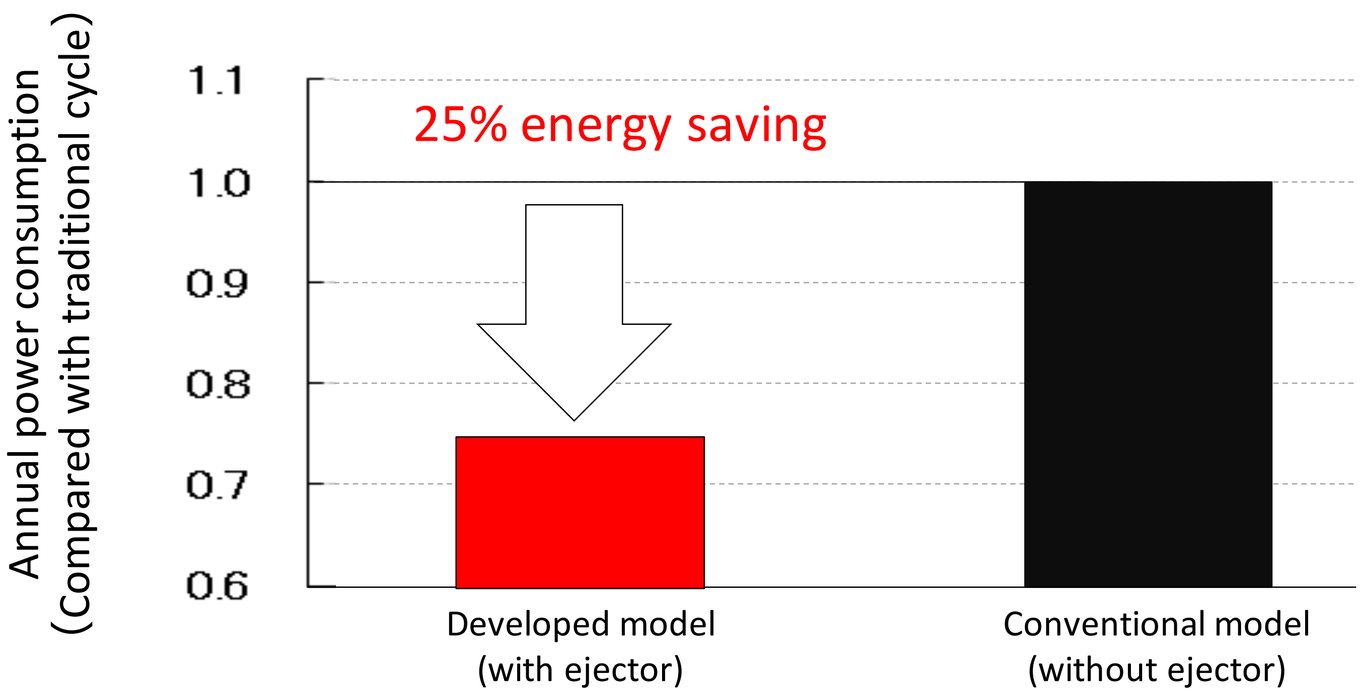

Measuring condition :
JIS B 8561 : 2007

25% energy saving was achieved by ejector
→Top class energy saving comparable to HFO machine !

m.inaba@denso.nl
p.vernooij@denso.nl
j.yun@denso.nl

ATMO sphere EUROPE solutions for europe natural refrigerants

Thank you for your attention!

Contact:
m.imazu@denso.nl
p.vernooij@denso.nl
j.yun@denso.nl

EUROPE ATMOsphere

solutions for europe

natural refrigerants

19 & 20 April, 2016 – Barcelona

Thank you very much!