The Evolution of CO_2 Refrigeration System

AUSTRALIA ATMOsphere business case natural refrigerants

16 May 2016 — Melbourne

Presented by Ian Wilson,
Strathbrook Industrial Services

Danfoss ENGINEERING TOMORROW

Strathbrook INDUSTRIAL SERVICES

Contents

- The development and incremental improvement in design across the three project undertaken for F Mayer Imports
- **Stage 1** - Sub critical CO_2 cascade with R134a (2011)
- **Stage 2** - Sub critical CO_2 cascade with trans-critical CO_2 and high demand chiller (2013)
- **Stage 3** - Sub critical CO_2 cascade with optimized trans –critical CO_2 and NH_3 high demand chiller (2015)

Danfoss ENGINEERING TOMORROW

Strathbrook INDUSTRIAL SERVICES

System design brief (stage 1)

- Existing building with post tensioned slab floor
- The owner of the site would not allow the floors to be cut up so the freezer, cool room and conditioned stores had to be built on top of the existing floor.
- The customer wanted a high level of energy efficiency and wanted to be seen as an environmentally friendly green provider.

Danfoss ENGINEERING TOMORROW

Strathbrook INDUSTRIAL SERVICES

Design Solution

- Under floor heating using cool glycol recovered from refrigeration system
- CO_2 /R134a cascade freezer room system 120kw Q @ -27sst - 5 sct
- Warm glycol defrosting using heat recovered from refrigeration system
- R134a medium temp system 120kw chiller + 60kw loadout
- Danfoss control system with off site monitoring and reporting

Danfoss ENGINEERING TOMORROW

Strathbrook INDUSTRIAL SERVICES

Freezer room under floor heating

- A glycol solution is maintained at +12 deg C to prevent the sub floor from cooling below 10 deg C and is circulated through the nylon pipes by a small pump. The glycol is heated by the defrost glycol system which is maintained at 50 deg C using waste heat from the R134a high stage rack.
- Know one ever talks about how much it will cost to operate an electric element sub floor heating system.
- This freezer room would have cost $30 000 per year to run the heaters.

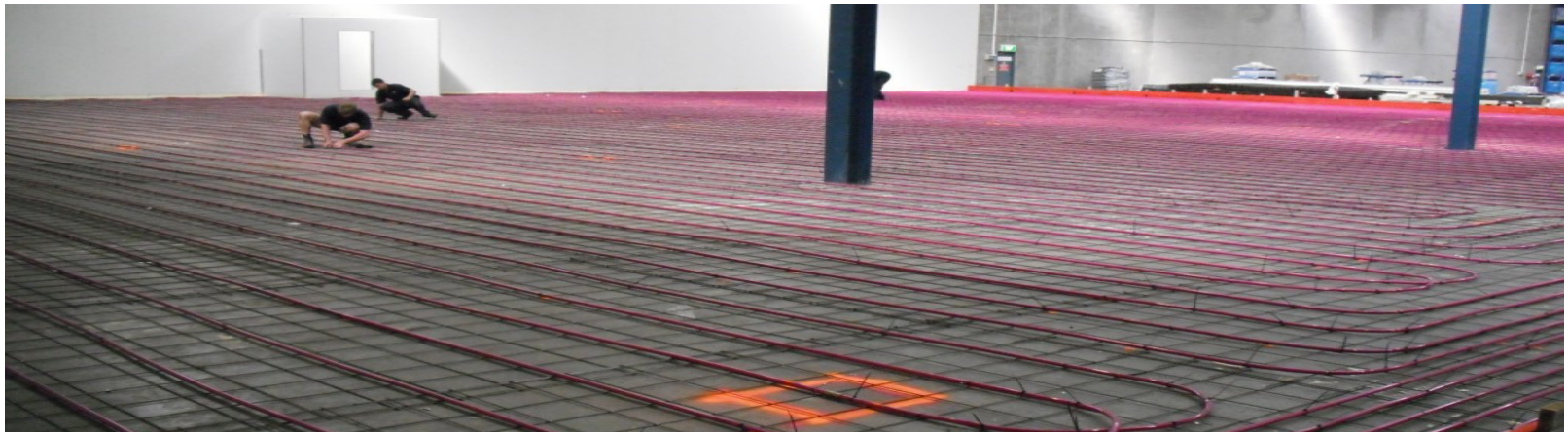

Danfoss ENGINEERING TOMORROW

Strathbrook INDUSTRIAL SERVICES

Freezer room under floor heating by Strathbrook's

- A glycol solution is maintained at +12 deg C to prevent the sub floor from cooling below 10 deg C and is circulated through the nylon pipes by a small pump. The glycol is heated by the defrost glycol system which is maintained at 50 deg C using waste heat from the R134a high stage rack.
- Know one ever talks about how much it will cost to operate an electric element sub floor heating system.
- This freezer room would have cost $30000 per year to run the heaters

Danfoss ENGINEERING TOMORROW

Strathbrook INDUSTRIAL SERVICES

Freezer system cascade racks

Rack built by Strathbrook

Danfoss ENGINEERING TOMORROW

Strathbrook INDUSTRIAL SERVICES

R744 rack system

Designed and built by Strathbrook

Danfoss ENGINEERING TOMORROW

Strathbrook INDUSTRIAL SERVICES

Rack package

- Cool room, pasta store and chocolate store rack package
- Built by Strathbrook
- Note receiver drop leg to reduce refrigerant charge

Danfoss ENGINEERING TOMORROW

Strathbrook INDUSTRIAL SERVICES

Glycol defrost system

Freezer evaporators & floor heating system application

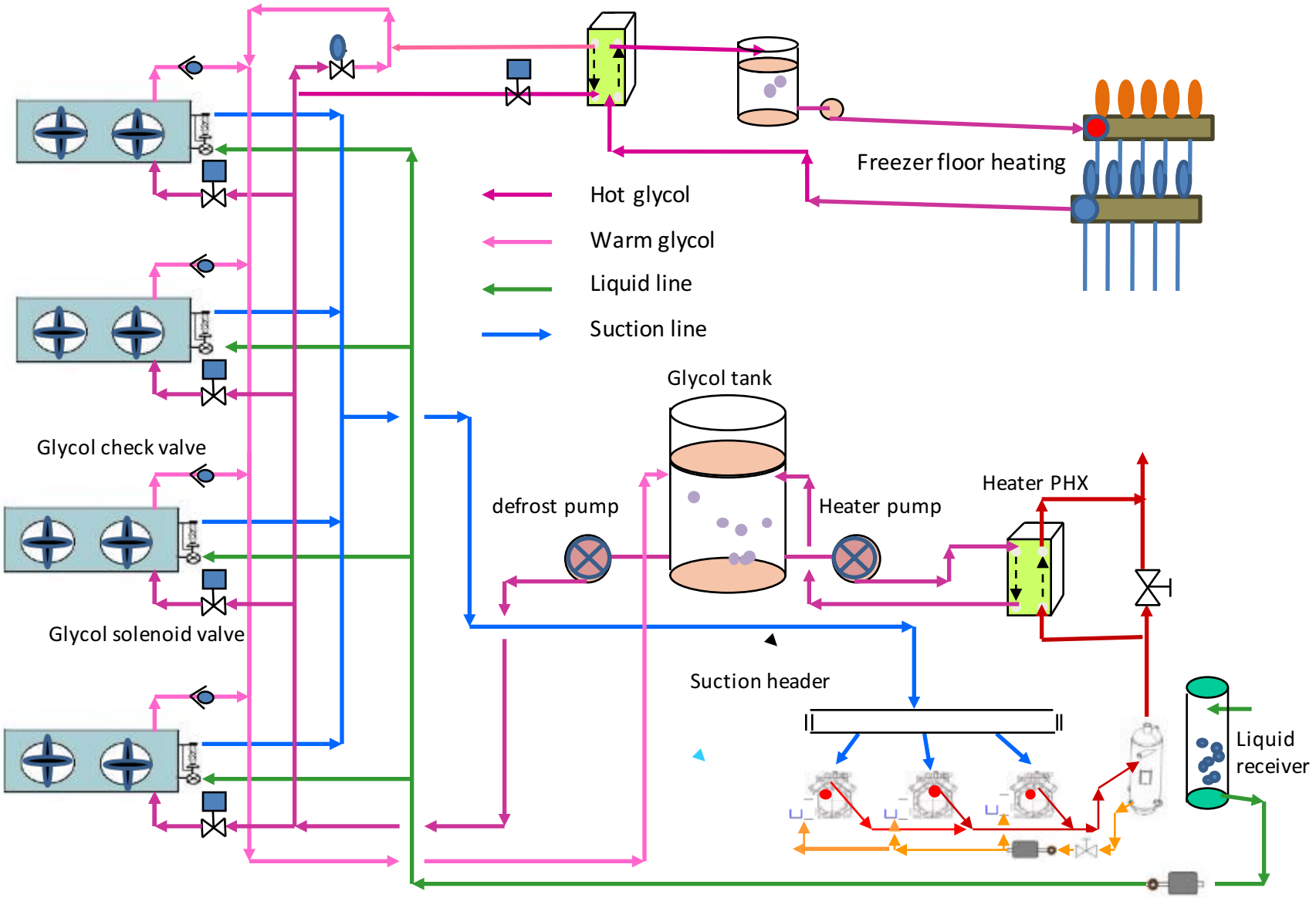

Glycol defrost system for freezer evaporators & floor heating system

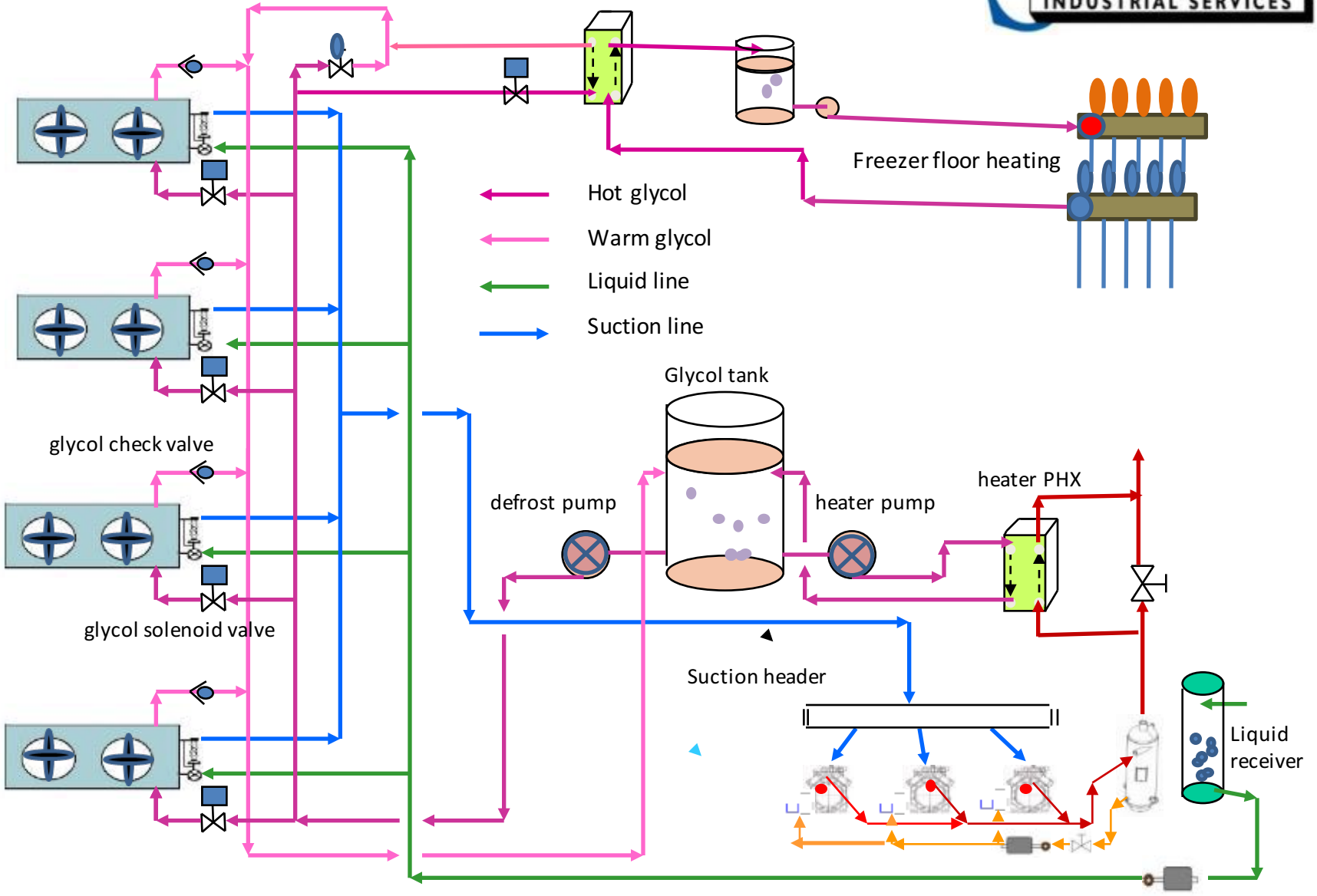

Summary of stage 1

- R134a / CO2 120kw freezer system
- warm glycol defrosting with heat from discharge gas of high stage R134a rack package
- Cool glycol underfloor heating
- R134a chiller of 120 kw + 60kw load out
- Air cooled condensers with fan cycling
- Danfoss control system with basic control logic to allow for automatic operation and active pressure control.
- Energy efficiency 25% better than HFC systems
- ARBS REFRIGERATION PROJECT OF THE YEAR AWARD WINNER 2012

Danfoss ENGINEERING TOMORROW

Strathbrook INDUSTRIAL SERVICES

System design brief (stage 2)

- The next stage was at the same site in the adjoining unit in the complex , and had the same floor issues.
- The customer wanted a high level of energy efficiency and wanted to go to the next level in energy efficiency and with their green credentials

Danfoss ENGINEERING TOMORROW

Strathbrook INDUSTRIAL SERVICES

Design solution

- Under floor heating using cool glycol heated by heat recovered from refrigeration system
- CO2 / CO2 cascade freezer room system 120kw Q @ -27sst -5 sct
- Warm glycol defrosting using heat recovered from refrigeration system.
- CO2 trans critical chiller (120kw + 60kw load out) with high demand cooling
- Danfoss control system with off site monitoring and reporting

Strathbrook INDUSTRIAL SERVICES

What is required from a DX medium temp CO2 system?

- Compressor performance at least equal to R134a in all seasonal conditions (or at least a total annual power consumption that is equal to or out performs R134a)
- Reliable operation (in application range approved by manufacturer)
- Safety margins in design parameters to allow for abnormal events
- System cost that is in proportion to R134a system, and the cost of power so any additional costs can be repaid by reduced power usage

Danfoss ENGINEERING TOMORROW

Strathbrook INDUSTRIAL SERVICES

What about trans critical - can it be the solution as it is in the UK

- Our ambient conditions are higher than the UK and super critical operation is very inefficient
- So a cascade solution is required to prevent super critical operation

Danfoss ENGINEERING TOMORROW

Strathbrook INDUSTRIAL SERVICES

Standard trans critical system design

Refrigeration system for supermarket cooling using direct expansion Carbon dioxide only (cascade design for simplified oil system)

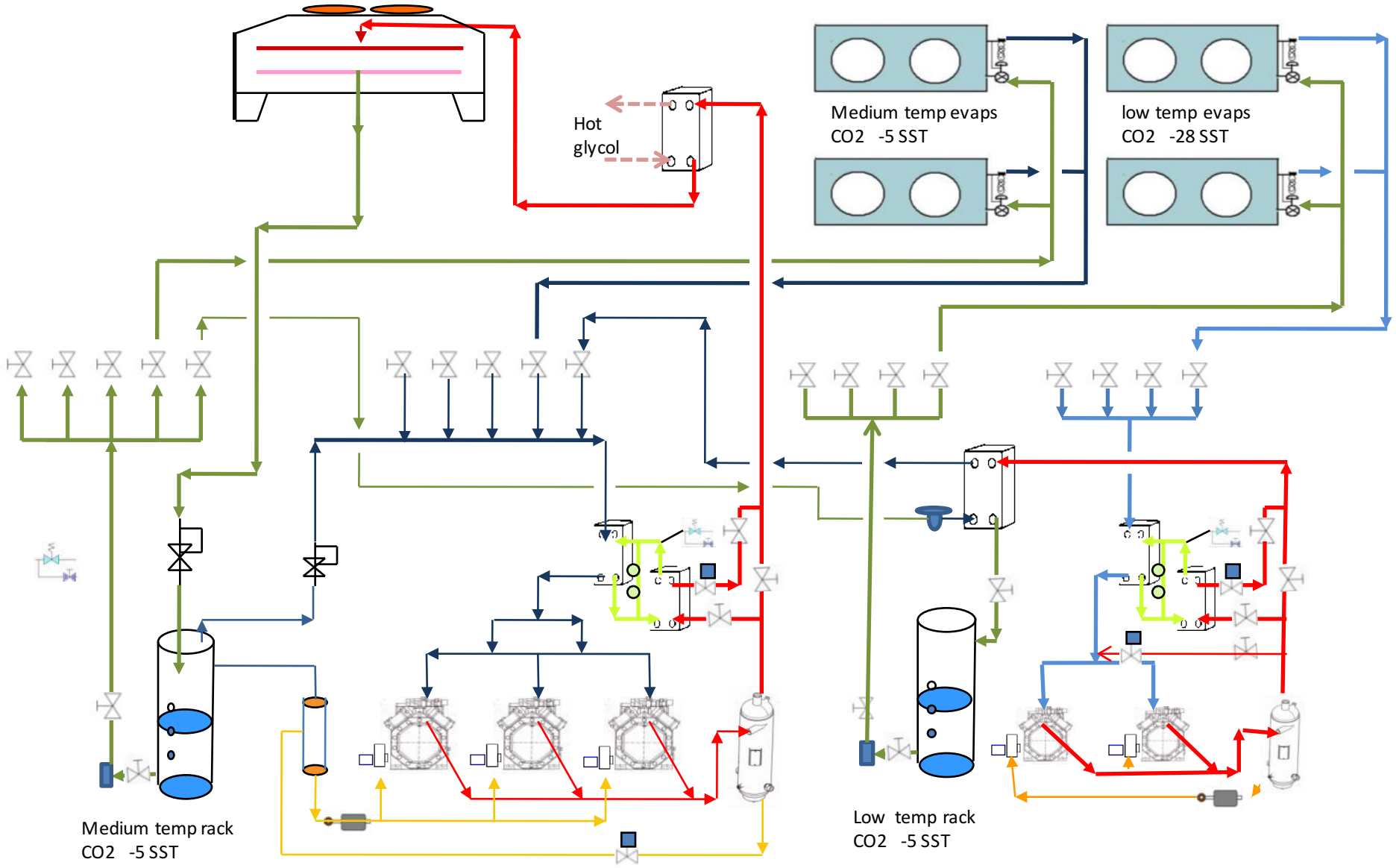

The limitations of trans critical systems

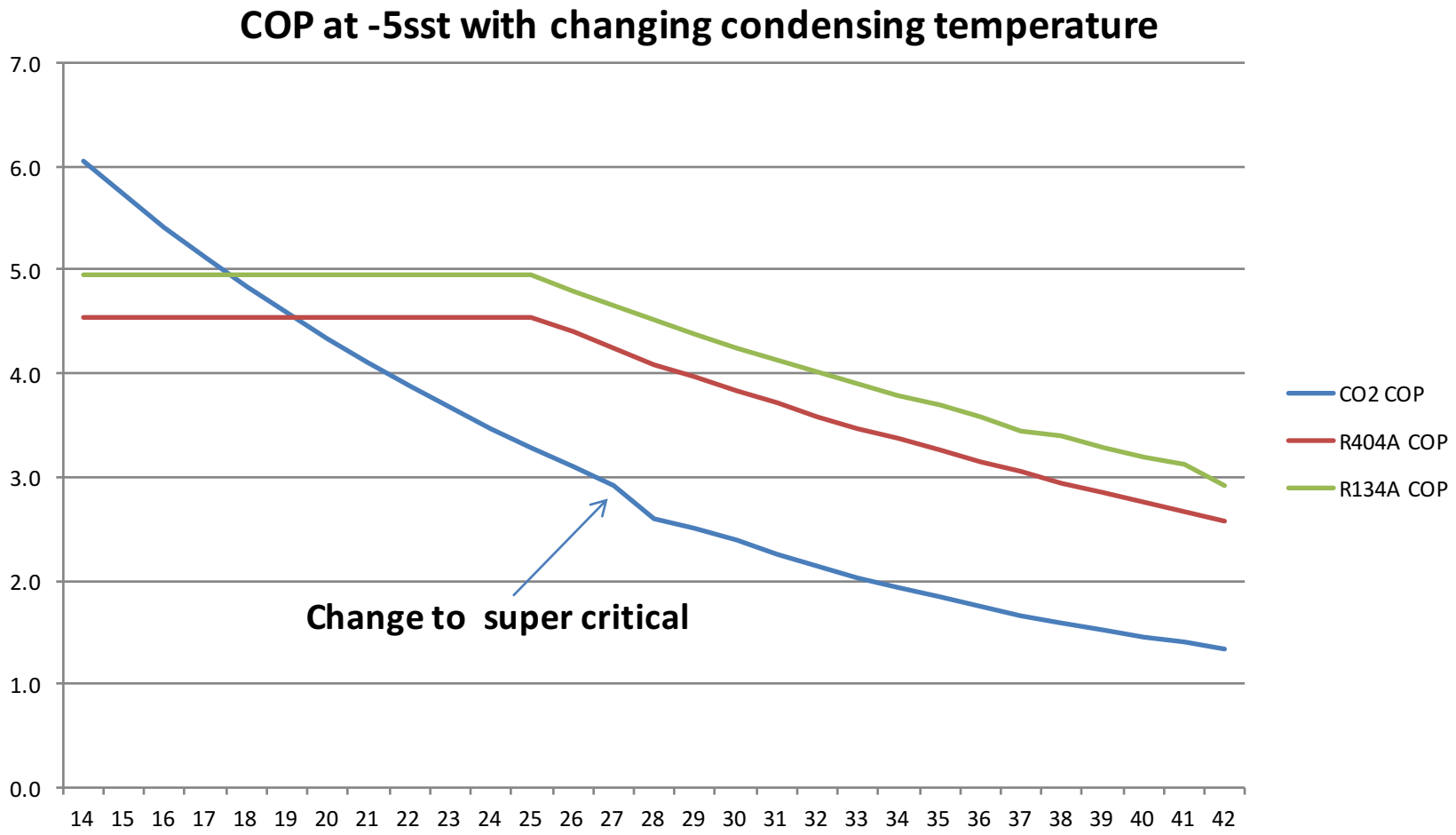

Danfoss ENGINEERING TOMORROW

Strathbrook INDUSTRIAL SERVICES

COP comparison R134a v R744 @-7.5 SST and changing SCT

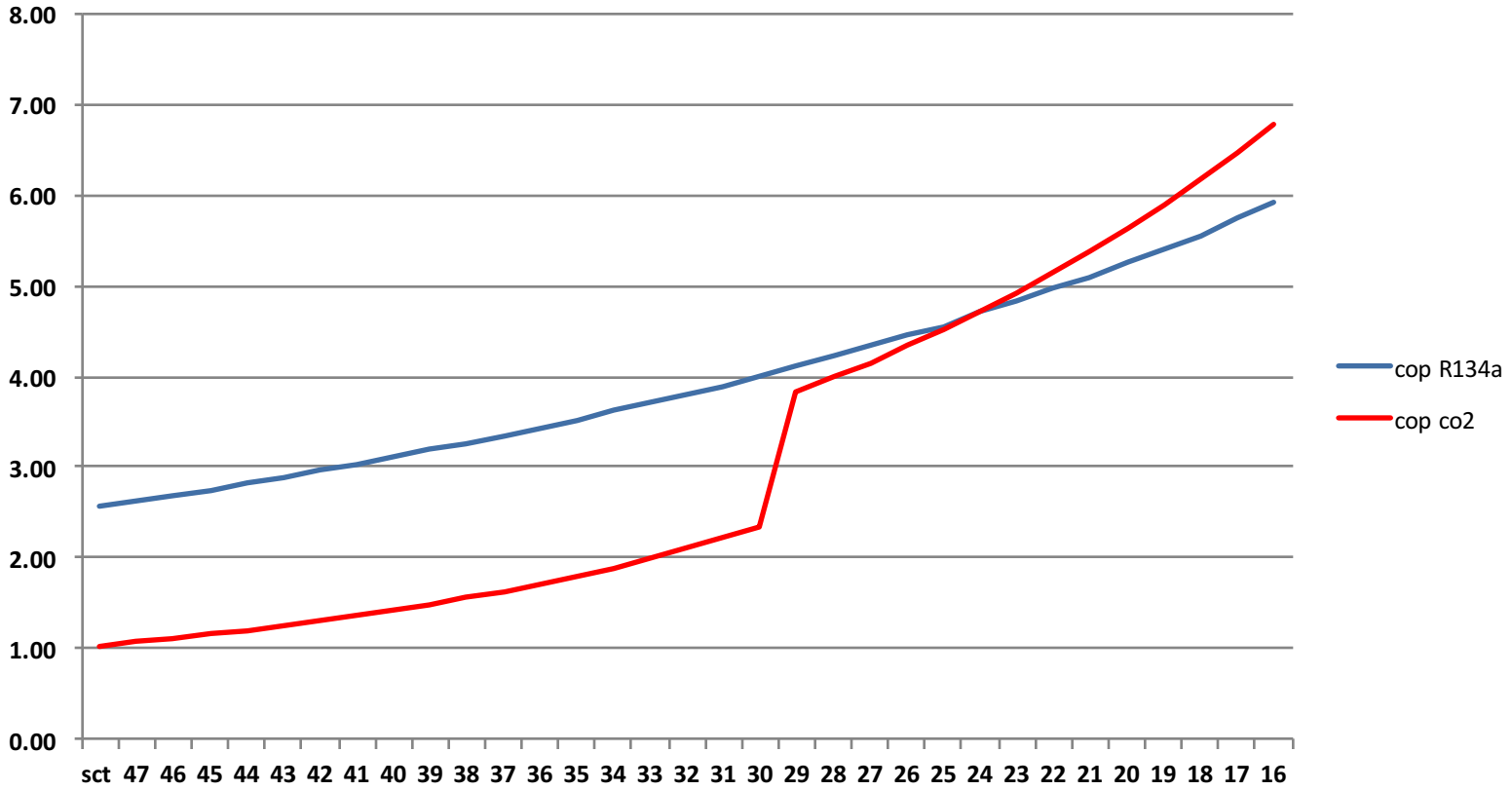

Minimum condensing 20k above suction

Danfoss ENGINEERING TOMORROW

Strathbrook INDUSTRIAL SERVICES

What does the system do when it is too hot to work sub critical?

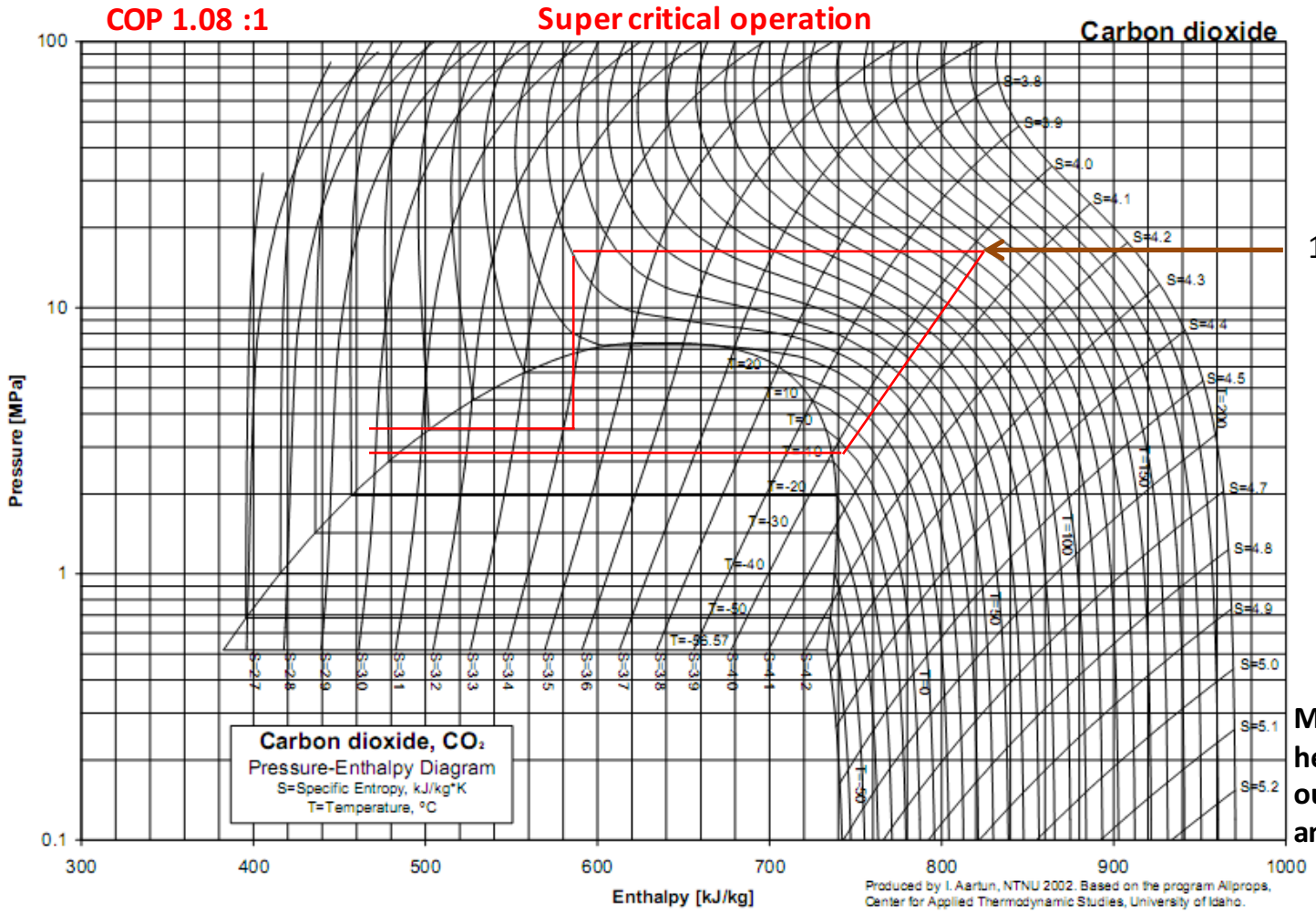

Maximum de-super heating @50 deg C outlet temp (47 ambient &-7.5sst)

Danfoss ENGINEERING TOMORROW

Strathbrook INDUSTRIAL SERVICES

What happens if we want sub critical operation?

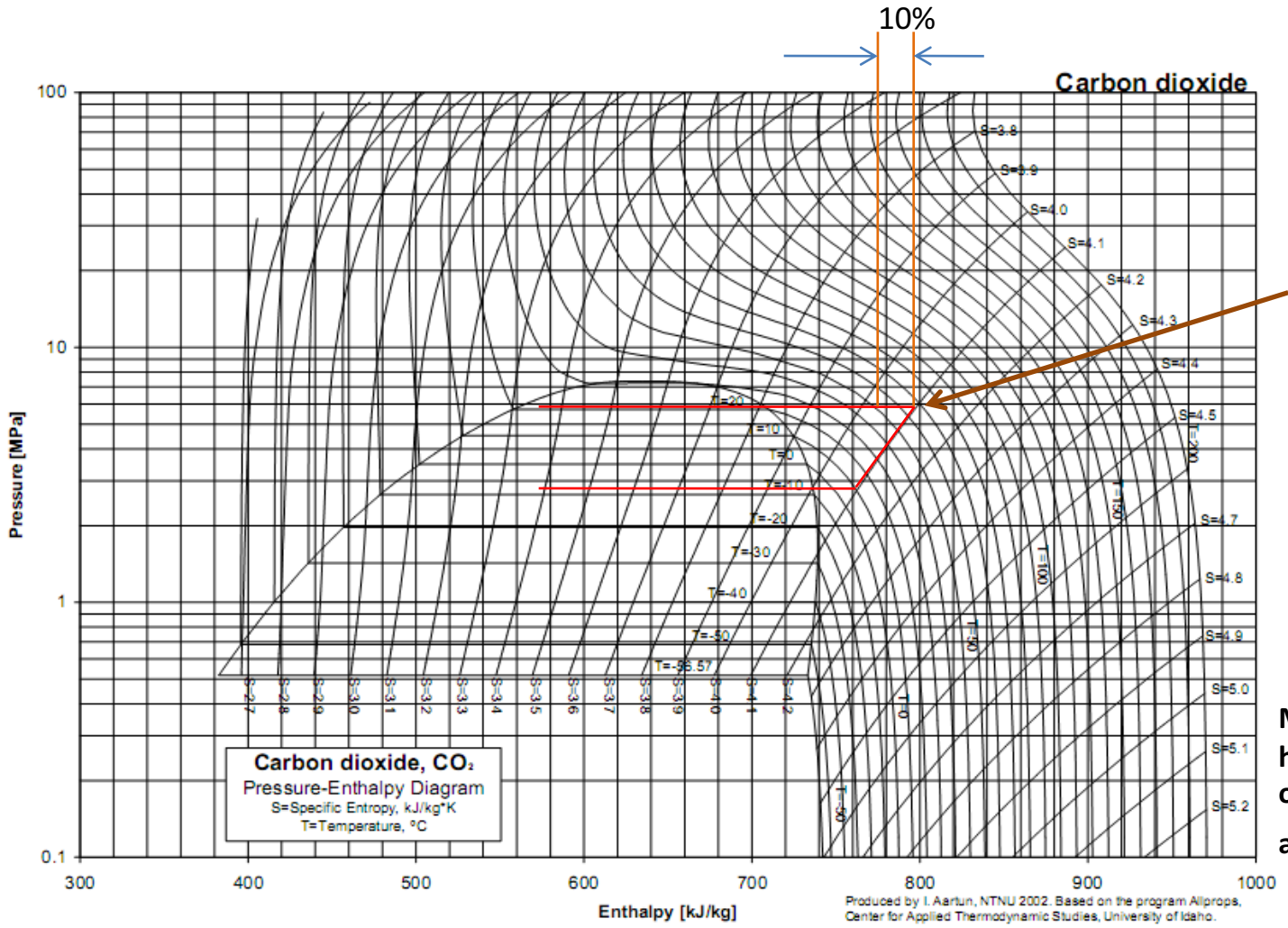

Maximum de-super heating @ 50 deg C outlet temp (47 ambient)

What does the gas cooler do when it is too hot to work sub critical?

Danfoss ENGINEERING TOMORROW

Strathbrook INDUSTRIAL SERVICES

What happens if we want sub critical operation?

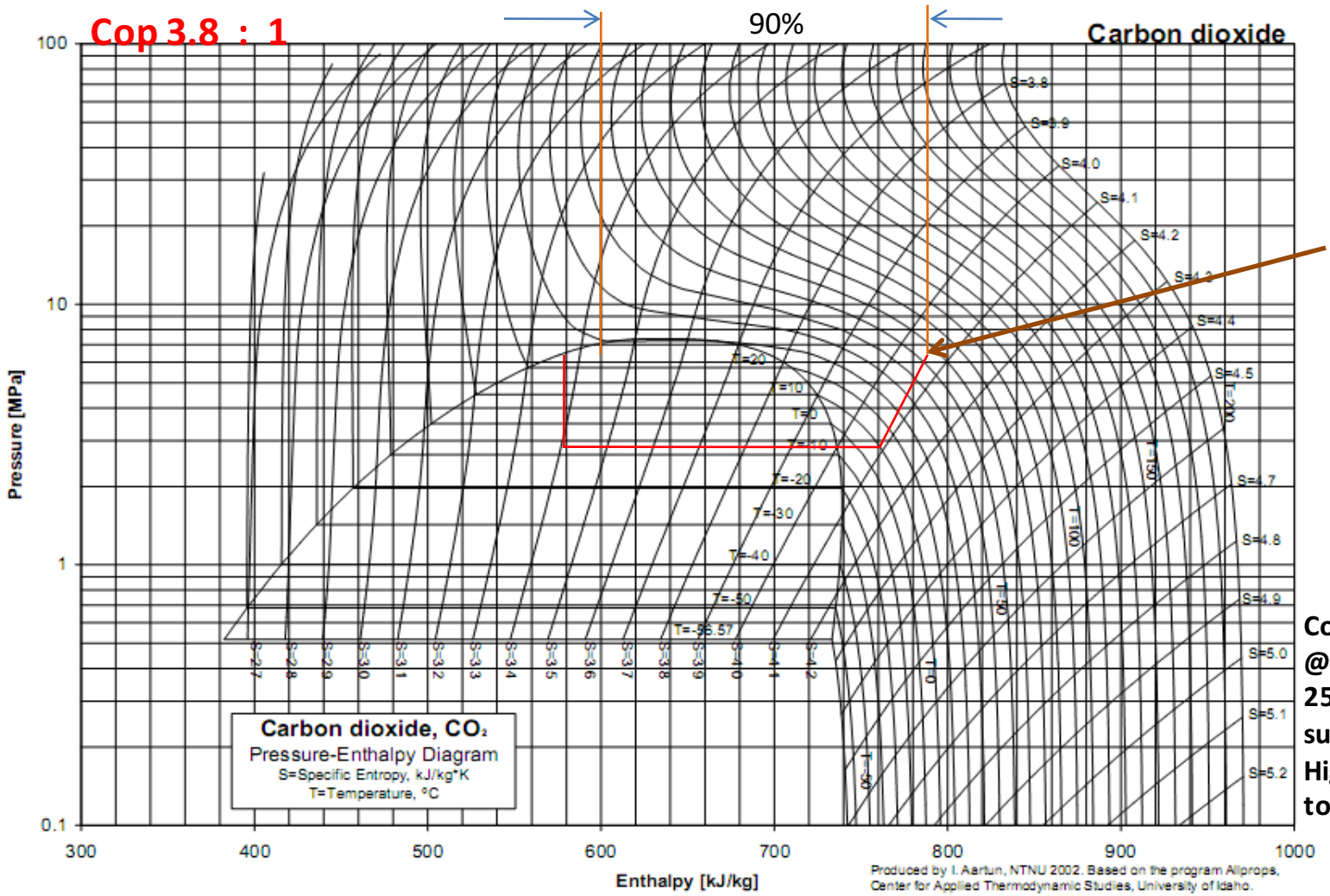

Condensing temp @ 20 ambient is 25 deg C, (5 deg C sub cooling by High stage remains to be done)

What does the gas cooler do when it is too hot to sub critical?

Danfoss ENGINEERING TOMORROW

Strathbrook INDUSTRIAL SERVICES

Refrigeration system for supermarket cooling

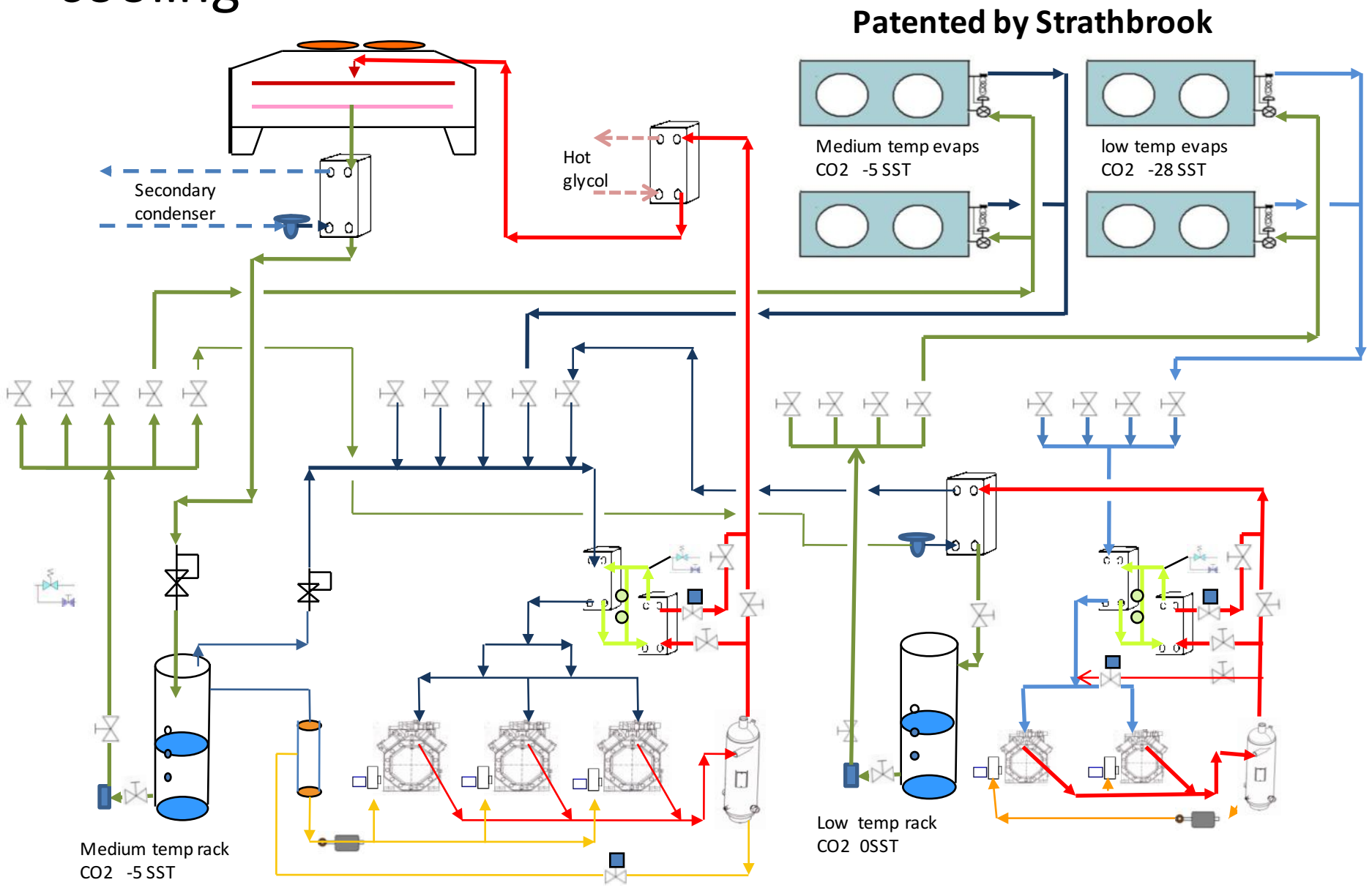

System design

- Chilled water system and high demand cooling system with R134a screw chiller & 7000L chilled water tank
- Twin Bitzer CSH screw compressors with air cooled condensers and fan cycling control
- COP 3.53 : 1

ENGINEERING TOMORROW

Strathbrook INDUSTRIAL SERVICES

Refrigeration plant room

Danfoss
ENGINEERING
TOMORROW

Strathbrook
INDUSTRIAL SERVICES

Carbon dioxide rack system

ENGINEERING
TOMORROW

Strathbrook
INDUSTRIAL SERVICES

High stage CO2 system plus cool room & staging cooling

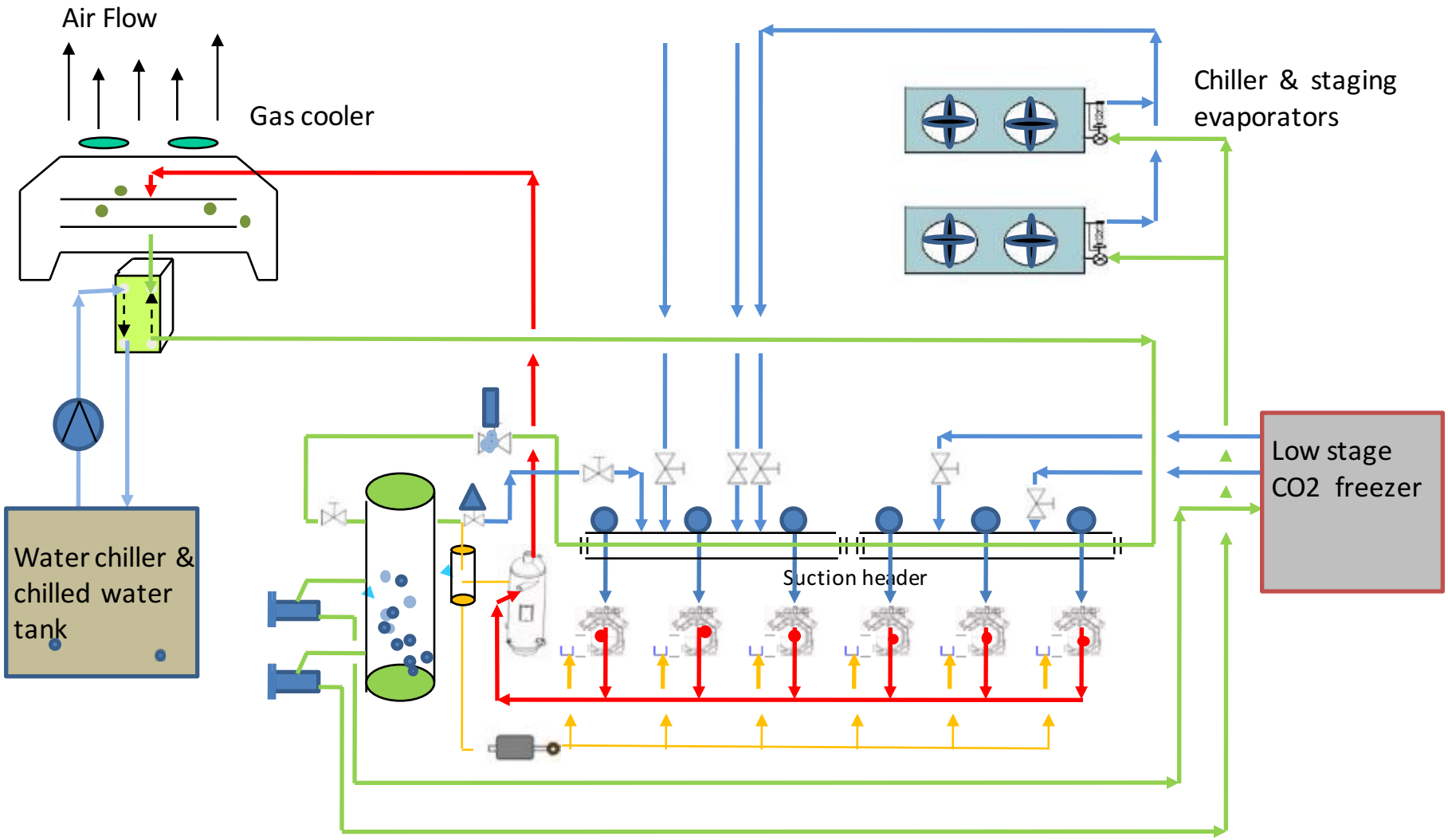

Low stage rack open flash intercooler/receiver & glycol heating

Designed and built by Strathbrook Industrial Services

Danfoss
ENGINEERING TOMORROW

Strathbrook
INDUSTRIAL SERVICES

Freezer room CO2 rack system

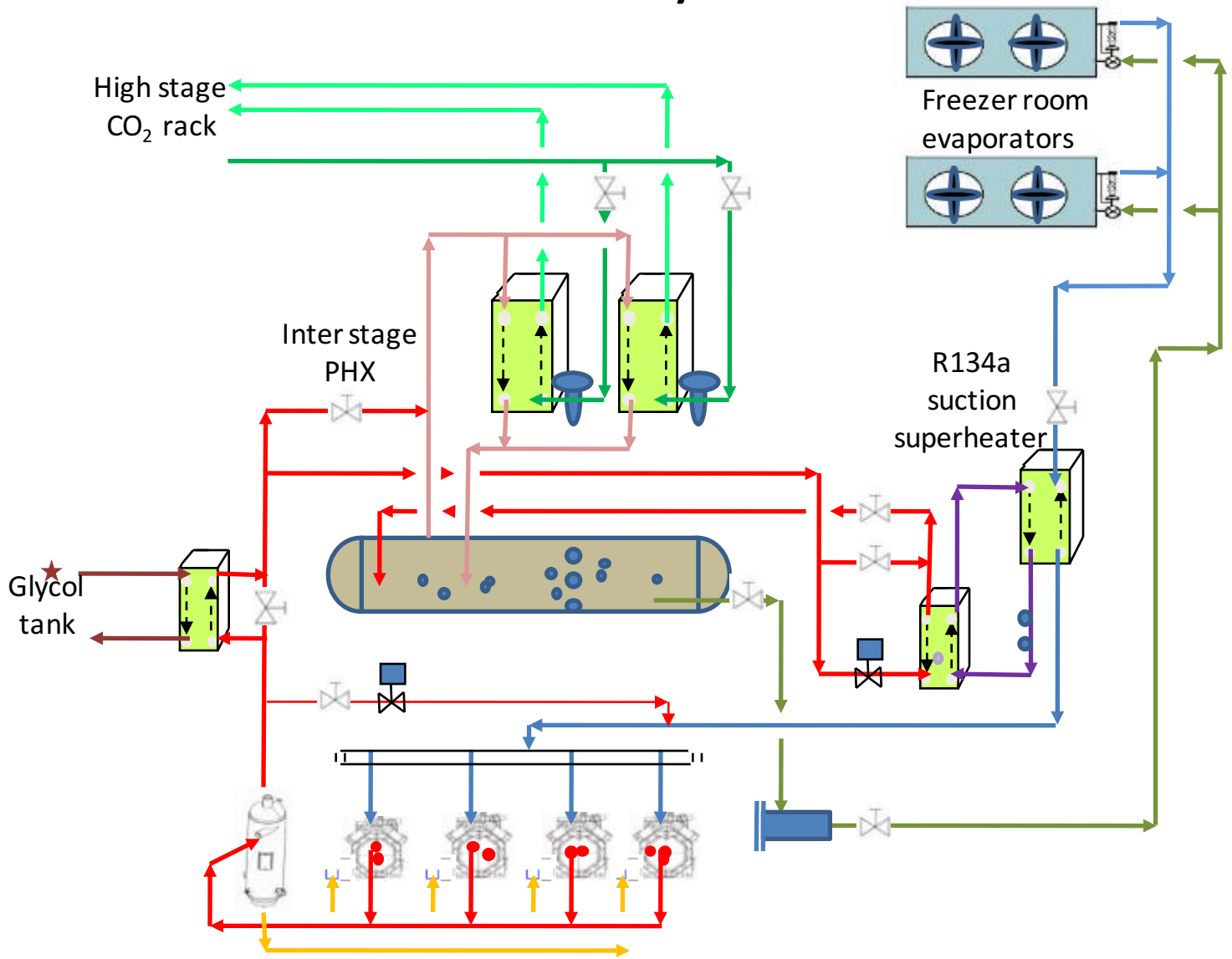

Danfoss
ENGINEERING
TOMORROW

Strathbrook
INDUSTRIAL SERVICES

Warm glycol tank & pumps

Danfoss
ENGINEERING
TOMORROW

Strathbrook
INDUSTRIAL SERVICES

Summery of stage 2

- CO2 / CO2 120kw cascade design with sub critical low stage and trans critical high stage
- Warm glycol defrosting with heat from discharge gas of low stage CO2 rack package
- Cool glycol underfloor heating
- CO2 chiller of 120 kw + 60kw load out
- CO2 Air cooled gas coolers with EC fan speed control
- R134a air cooled screw compressor water chiller
- Energy efficiency 25% better than stage 1
- Danfoss control system with control logic to allow for automatic operation and active pressure control
- Finalist ARBS REFRIGERATION PROJECT OF THE YEAR AWARD 2014

Danfoss ENGINEERING TOMORROW

Strathbrook INDUSTRIAL SERVICES

System design brief (stage 3)

- Same type of floor in the freezer and chiller
- The customer wanted a high level of energy efficiency and wanted to go to the next level in energy efficiency and with their credentials

Danfoss ENGINEERING TOMORROW

Strathbrook INDUSTRIAL SERVICES

Refrigeration trans-critical CO2 with Ammonia high demand chillers

Danfoss ENGINEERING TOMORROW

Strathbrook INDUSTRIAL SERVICES

Micro charged Ammonia water chiller

- Stand alone water chillers with very small refrigerant charge , and on board variable speed control.
- Cools the CO2 system in hot weather to improve the overall systems power consumption
- Chiller COP 8.2 : 1
- Refrigerant R717 charge 5kg

Designed and built by Strathbrook Industrial Services

Danfoss ENGINEERING TOMORROW

Strathbrook INDUSTRIAL SERVICES

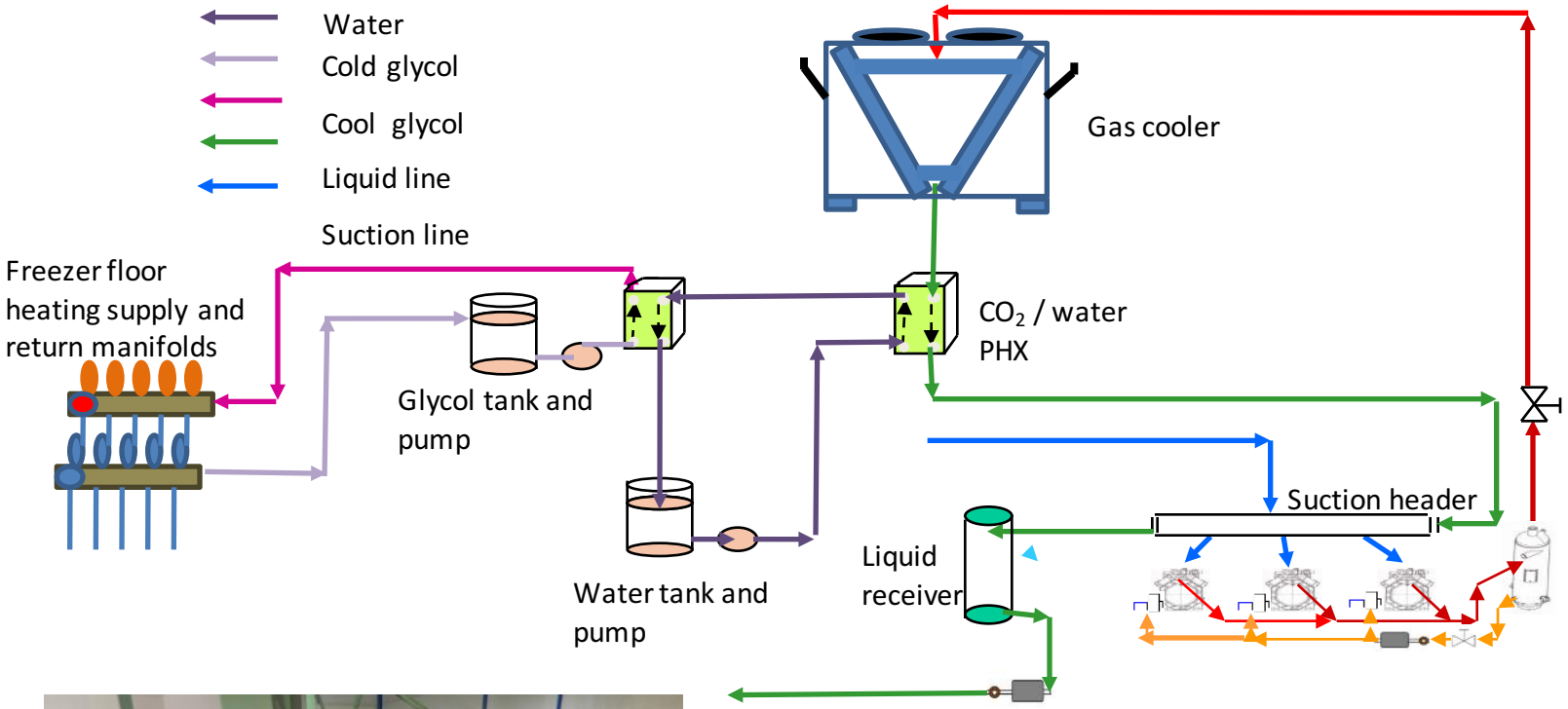

- Patented floor heating with cool glycol under floor heating with heat recovered from refrigeration liquid line
- Warms the floor while it cools the refrigerant. 1% COP gain in entire system performance

Danfoss ENGINEERING TOMORROW

Strathbrook INDUSTRIAL SERVICES

Summary of stage 3

- CO2 / CO2 120kw freezer system
- warm glycol defrosting with heat from discharge gas of low stage CO2 rack package
- Cool glycol underfloor heating
- CO2 chiller of 120 kw
- CO2 16 deg. C load out area of 60kw
- Air cooled gas coolers with EC fans & water sprays
- NH3 micro charged chillers with dry coolers EC fans & water sprays
- Energy efficiency 5 to 10% better than stage two
- Danfoss control system with basic control logic to allow for automatic operation and active pressure control
- Finalist ARBS REFRIGERATION PROJECT OF THE YEAR AWARD 2016

Conclusion

- Multiple small improvements provide a significant improvement to the COP of the final system.
- A more complex mouse trap will cost more to install
- We can do without chemical refrigerants and we should expect to have an efficiency gain to pay for the additional cost
- The control system logic needs to be well thought through.

A special thanks to ***F Mayer Imports*** *for their trust in us & **Danfoss** for their continuing support*

F MAYER IMPORTS PTY LTD
A C N 000 697 889 ABN 51 000 697 889
IMPORTER - FOOD SPECIALTIES

Danfoss
ENGINEERING TOMORROW

Strathbrook
INDUSTRIAL SERVICES